ZODIAC®

a FLUIDRA company

2020 Catalogue

POOL CARE EQUIPMENT

Contents

ZODIAC® AND YOU

- Fluidra p.4
- 2020 Innovations p.6

CLEANING

INTRODUCTION P.10
ELECTRIC CLEANERS P.14
TORNAX PRO P.16
- RT 2100 p.17
- RT 3200 p.18

CYCLONX™ PRO P.19
- RC 4380 p.20
- RC 4400 p.21
- RC 4401 p.22
- RC 4402 p.23

VORTEX™ PRO 4WD P.24
- RV 5300 p.25
- RV 5380 p.26
- RV 5600 p.27

ALPHA IQ™ PRO P.28
- RA 6300 iQ p.30
- RA 6500 iQ p.31
- RA 6700 iQ p.32

HYDRAULIC CLEANERS P.34
- KONTIKI™ 2 p.35
- T3® p.36
- T5®Duo p.37
- MX6™ p.38
- MX9™ p.39
- Cyclonic™ Leaf Catcher p.40
- Spa Wand p.41

POLARIS®

INTRODUCTION P.44
- Polaris® QUATTRO™ Sport p.46
- Polaris® 280 p.47
- Polaris® 3900 Sport p.48
- Polaris® TailSweep Pro p.49
- Booster Pump & Control box p.50

HEATING

INTRODUCTION P.52
HEAT PUMPS P.58
- Z200 p.60
- Z200 defrost p.62
- Z300 p.64
- Z400iQ p.66
- Z400iQ Stainless p.68
- ZS500 p.70
- Z500iQ p.72
- Z600 Silent p.74
- Z700 Duo p.76
- Power Force p.78
- Z900 p.80

ELECTRIC HEATERS P.82
- RE/L p.83
- RED LINE p.84
- RE/U p.85
- RE/I p.86

EXCHANGERS P.87
- Heat Line - Unequipped, Plus without circulating pump & with circulating pump p.88
- Uranus + Unequipped and Plus p.90

DEHUMIDIFICATION

INTRODUCTION P.94
- DT 850 E p.99
- Sirocco Free-discharge p.100
- Sirocco Through-the-wall p.102
- DF Through-the-wall p.104
- DF ducted 403 - 408 p.106
- DF ducted 410 - 412 p.108
- CAE p.110
- OMEGA p.114
- ENERGY Fan p.118
- CANAL FAST Fan p.119
- Floor diffusers p.120
- Ventilation accesories p.122

SET®

INTRODUCTION P.126
- Z600 Silent p.127

DEHUMIDIFICATION SET® p.129
- SA 1 p.130
- SA 2 p.132
- SA 3 p.134

FILTRATION

INTRODUCTION P.138

PUMPS P.142
- FloPro™ p.144
- FloPro™ e3 p.146
- FloPro™ VS p.148
- iQPUMP p.150

FILTER P.151
- CS p.152
- MS p.154
- Crystal Clear p.156

DESIGN P.157
- NL Leds p.159
- PowerFall p.162

WATER TREATMENT

INTRODUCTION P.164

DOSING SYSTEMS P.165
- pH Expert p.166
- Chlor Expert p.169

SALT WATER CHLORINATORS P.171
- Ei² p.172
- Ei² Expert p.174
- eXO® iQ p.178
- eXO® iQ LS p.180
- pH Link p.182

MAGNAPOOL® MAGNESIUM BASED CHLORINATOR P.184
- Hydroxinator® iQ p.186
- MagnaPool® Minerals p.188
- Crystal Clear p.189

MINERAL PURIFIER P.190
- Nature² Spa p.191

AUTOMATION

INTRODUCTION P.194
- AquaLink® TRi p.196

SPARE PARTS

- Cleaning p.198
- Polaris® p.238
- Heating p.248
- Deshumidification p.292
- Filtration p.300
- Water treatement p.312
- Automation p.336

General terms of sale p.338

FLUIDRA

THE PERFECT POOL EXPERIENCE

50 years ago Fluidra's four founding families opened our first company in Barcelona, Spain. Half a century on, and thanks to the support of all our valued customers, our global footprint now extends to over 45 countries. Always driven by our customer-first approach we strive to provide you with the best possible service.

Our portfolio includes some of the most trusted brands, including Jandy®, AstralPool®, Polaris®, Cepex®, Zodiac®, CTX Professional® and Gre®. We offer our customers an expansive array of products across both the residential and commercial pool and wellness markets.

We have some 5,500 employees and the necessary resources to accelerate innovation in critical areas like energy-efficiency, robotics and the Internet of Things. We are guided by clear values and come to work every day with a simple and direct mission in mind: **To create the perfect pool and wellness experience**.

Many thanks for your loyalty during these five decades. Fluidra is as dedicated as ever to its mission and looks forward to supporting the growth of your business for generations to come. With a 50 year heritage of excellence, this is just the beginning.

FLUIDRA
Est. 1969
50 YEARS

INTEGRATED BUSINESS MODEL

R+D+i
Excellence in innovation with +200 engineers and +1,100 patents

Production
37 flexible multi-technology plants in key countries

Logistics
Logistics operators to ensure fast and reliable deliveries

Distribution
Some 136 points of sale, giving support and training to the professional clients in over 45 countries

Engineering
Design and engineering of water projects

KEY FIGURES

5,500
Number of employees

+45
Number of countries

136
Number of sales branches

37
Number of production centres

HIGHLY RECOGNIZED BRANDS

Jandy · ASTRALPOOL · Polaris · CEPEX · ZODIAC · Gre

A GLOBAL POWERHOUSE

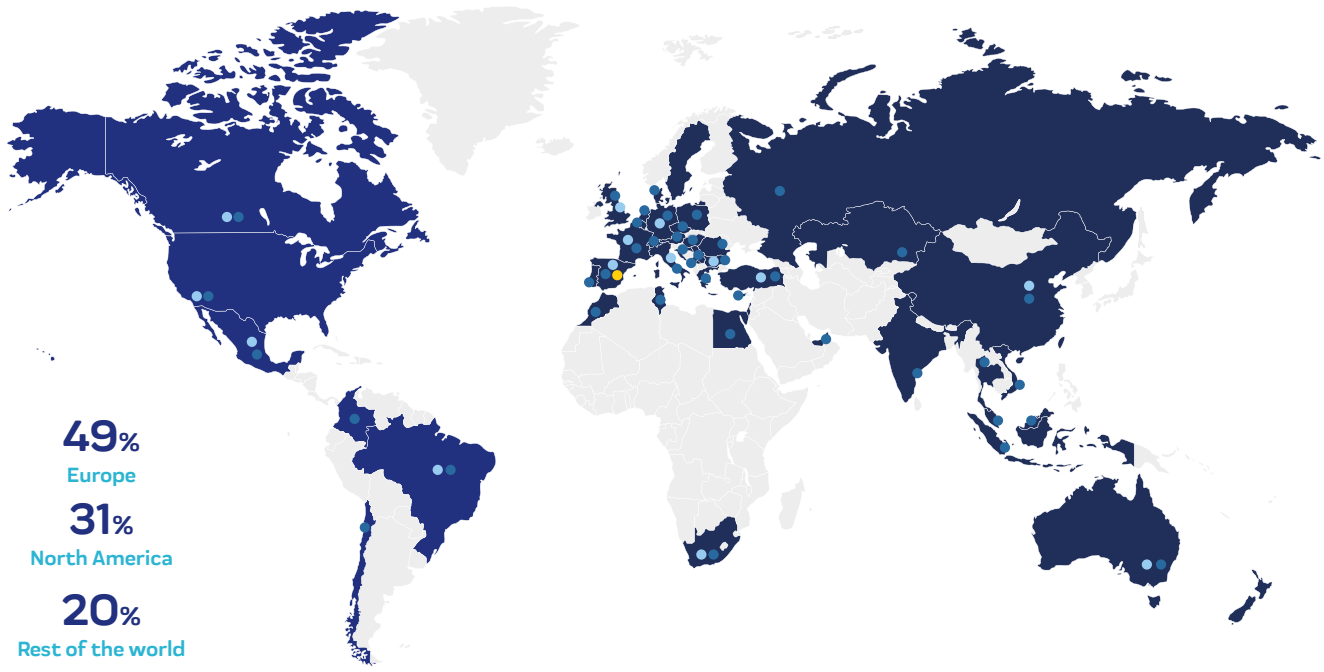

> CUTTING-EDGE INNOVATIONS

ROBOTIC CLEANER - ALPHA iQ™

ULTRA-EFFICIENCY COMBINED WITH INTELLIGENCE

PERSONALISED CLEANING

Thanks to its Sensor Nav System ™, the ALPHA iQ™ robotic cleaner identifies the configuration of your pool to optimise its movements and cleaning time. Its pressure sensor provides superior wall climbing and waterline cleaning according to the depth of the pool.

EFFECTIVE SUCTION

Its patented cyclone suction is extremely powerful and long lasting suction. Thanks to its extra-large suction capacity and very fine filtration system, ALPHA iQ™ optimally collects all types of debris.

EASY-TO-USE

Thanks to its patented Lift System, ALPHA iQ™ is lighter when removing it from the water. Its simple access to its filter and the visibility offered by its transparent window make it easy-to-use in all circumstances.

INTUITIVE CONTROLS

Monitor cleaning progress at any time using the intuitive interface of the iAquaLink™ application. ALPHA iQ™ is upgradeable thanks to possible optimisations and automatic remote updates.

iAquaLink™ CONTROL

PRESSURE CLEANER - POLARIS QUATTRO™

DEBRIS DOESN'T STAND A CHANCE

Equiped with brushes and 4 Wheel-drive The new Polaris Quattro™ cleans the floor and the walls by removing debris, even stuck-on debris.

Multi-directional navigation delivers quick and efficient coverage of the entire pool.

Its double-filtration filter canister and the extra-large debris intake collects both large and fine debris.

The filter canister can easily be cleaned without touching the debris with a simple jet of water.

HEAT PUMP - Z500iQ

THE ECO-SILENCE CHOICE, CONNECTED

Color to be confirmed

iAquaLink CONTROL

FULL INVERTER TECHNOLOGY: SILENT AND ECONOMICAL

Z500iQ comes equipped with the Inverter technology. With this technology, operating speed is adjusted based on the required amount of power, which depends on ambient temperature. You will enjoy savings. By activating the "silent" mode, Z500iQ is more discreet..

FITS EASILY INTO SMALL PLACES

The Z500iQ is discreet and can be installed next to any pool. Thanks to its smaller footprint, requiring half the space of standard heat pumps and to its vertical air flow, it can be placed in the smallest spaces.

EMBEDDED CONNECTIVITY[1]

With your smartphone, you can remotely set and consult Z500iQ heat pump's different modes of operation.

[1] iAquaLink™ app availability during the 2020 pool season

> CONNECTED INNOVATIONS

Smartphone connectivity has now over every sector, including swimming pools. To meet the needs of this growing market, Zodiac® is committed to developing high-tech products featuring smart, high-performance innovations. These connected devices can be monitored remotely from a Smartphone, instantly adjusting to the user's needs in just a few taps.

Did you know ?

When a product from Zodiac® range includes «iQ» word, this indicates that it is connected via iAquaLink™ smartphone app.

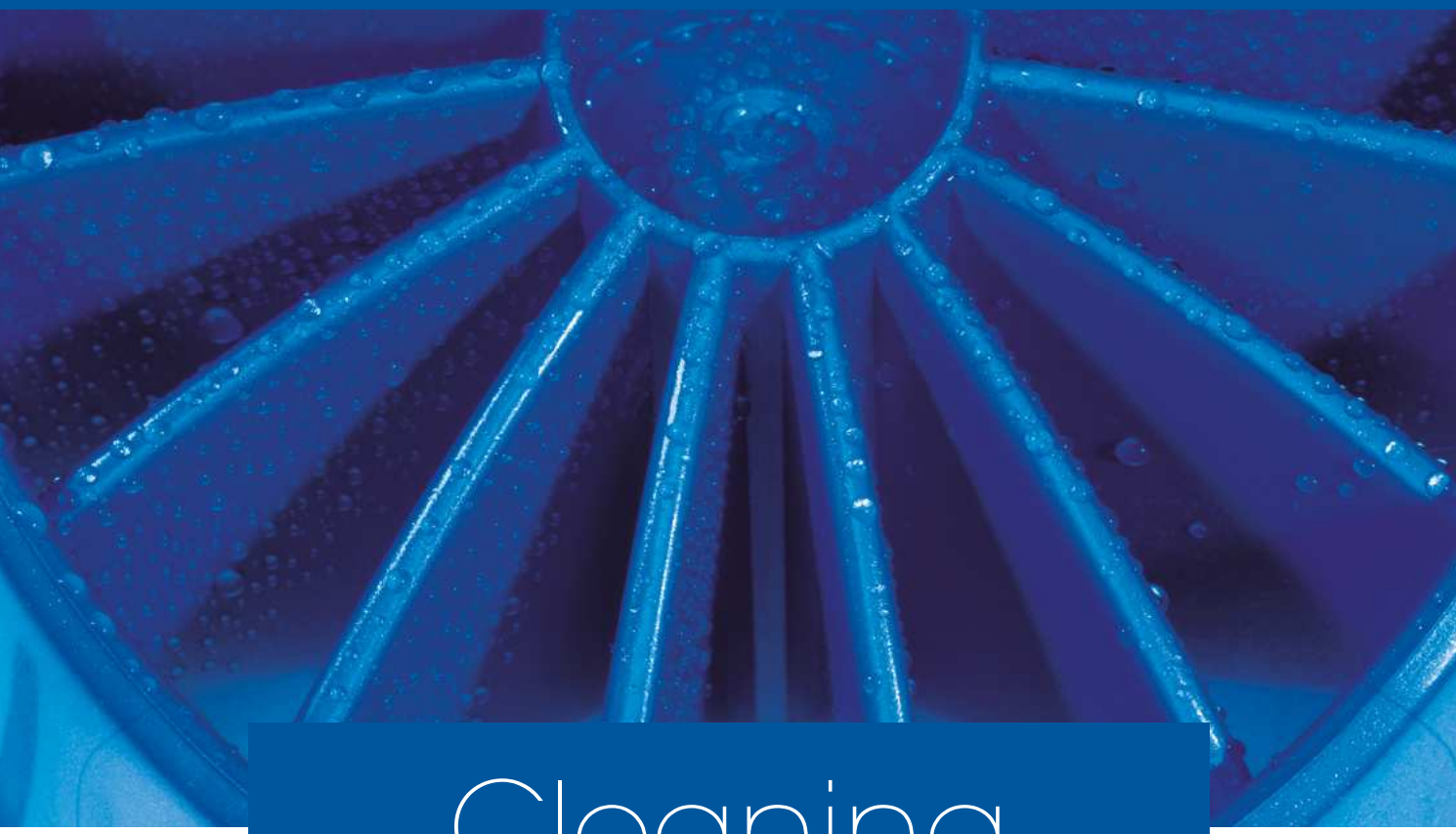

Cleaning

INTRODUCTION **P.10**

ELECTRIC CLEANERS **P.14**

TORNAX PRO **P.16**
- RT 2100 p.17
- RT 3200 p.18

CYCLONX™ PRO **P.19**
- RC 4380 p.20
- RC 4400 p.21
- RC 4401 p.22
- RC 4402 p.23

VORTEX™ PRO 4WD **P.24**
- RV 5300 p.25
- RV 5380 p.26
- RV 5600 p.27

ALPHA IQ™ PRO **P.28**
- RA 6300 iQ p.30
- RA 6500 iQ p.31
- RA 6700 iQ p.32

HYDRAULIC CLEANERS **P.34**
- KONTIKI™ 2 p.35
- T3® p.36
- T5®Duo p.37
- MX6™ p.38
- MX9™ p.39
- Cyclonic™ Leaf Catcher p.40
- Spa Wand p.41

> 3 TECHNOLOGIES FOR SWIMMING POOL CLEANING

To clean a pool as well as possible, multiple parameters are considered in **the choice of cleaning equipment:** shape and lining of the pool, standard of cleaning, volume to be covered, etc.

High technology Zodiac® cleaners match the different features of a pool, the cleaning time and every budget.

3 types of technologies are currently available:
electric cleaning, hydraulic cleaning and pressure cleaning.

> ZODIAC® ELECTRIC ROBOTIC CLEANERS: A HIGH-PERFORMANCE, STAND-ALONE SYSTEM

Separate from the filtration system and simply connected to the mains power, they are Plug&Play and **stand-alone equipment.**

With no action required and **programmable** (cleaning time, area to be covered, etc.), they reach every corner of the pool, climb the walls, clean the water line and collect impurities in their own filter basket.

There are different models for all types of pools.

> ZODIAC® HYDRAULIC ROBOTIC CLEANERS: A SIMPLE AND AFFORDABLE SOLUTION

Hydraulic robotic cleaners can be easily installed in the pool filtration system.
In fact, they work on the energy produced by your pump.

Vacuum cleaners capture debris by suction and accumulate it in the pump pre-filter.

More affordable than electric cleaners, hydraulic cleaners are connected to a pool vacuum point or a skimmer and are **particularly suitable for the smallest pools** (with a flat floor or gentle slope and above-ground pools).

> AUTOMATIC POLARIS® CLEANERS: THE POWER OF A HIGH-PRESSURE CLEAN

These cleaners **use the swimming pool's filtration pump as a power source** for even more efficient and precise high-pressure cleaning.
Instead of being connected to the suction, pressure cleaners are connected to the pool water return, using the vacuum point converted to discharge.
In this way, the pool skimmers remain active and maintain full surface filtration capacity.

Pressure cleaners work with a booster pump and have a canister that collects debris sucked in, preventing the pump pre-filter from becoming blocked.

To optimise the efficiency of these accessories, it is essential to **ensure they are compatible with the pool lining**, filtration equipment, environment, etc.

> ELECTRIC ROBOT CLEANERS
A stand-alone and efficient solution

The electric robots combine **the best of Zodiac® technology.**

Thanks to the embedded cyclone suction, a patented Zodiac® technology, **the cleaning performance is maintained throughout the cleaning cycle**. They even capture the finest debris without filter clogging.

Separate from the filtration system, these Plug&Play devices trap debris in their own filter basket, making them stand-alone.

> TORNAX PRO, EFFICIENCY PURE & SIMPLE

The Tornax robotic cleaner guarantees **efficient cleaning** of your pool, completely autonomously, thanks to its smart movement and its rotating brush, which removes debris before collecting it. Tornax is the **lightest** (5.5 kg) of all the Zodiac® robotic cleaners.
It is feather-light, meaning it is quick, easy and **effortless** to operate. Tornax is designed not only to be easy to use but also easy to maintain, as the filter can be accessed from the top so it can be rinsed without touching the debris.

> CYCLONX™ PRO, CONCENTRATED TECHNOLOGY

Robotic cleaners in the CyclonX™ PRO range provide optimum cleaning of the pool, thanks to several pre-programmed cycles, a **Deep Clean** cycle to clean the pool floor and a one-hour **Quick Clean** programme. Thanks to their large capacity filter (up to 3.7 L) and their wide suction inlets, all debris is collected. The filter can be easily cleaned using the **Push'n'Go™** function, a patented Zodiac® innovation that helps raise the filter basket handle with the push of a button.

> VORTEX™ PRO 4WD, ULTIMATE POWER IN A 4 X 4 VERSION

Robotic cleaners from the Vortex™ PRO 4WD range are equipped with Zodiac® patented **extra-powerful and long-lasting suction**. Equipped with **4-wheel drive**, these robotic cleaners are truly all-terrain: they adapt to all kinds of surfaces, perfectly grip the walls and get over obstacles more easily. Most of Vortex™ PRO 4WD robotic cleaners also come with **Lift System** technology, so they are lighter when being removed from water (20% less effort).

> ALPHA iQ™, ULTRA-EFFICIENCY COMBINED WITH INTELLIGENCE

With its Sensor Nav System™, the ALPHA iQ™ range identifies the configuration of your pool **to optimise movements** and cleaning time. The patented cyclone suction garantees **extremely powerful and long-lasting suction**. Thanks to its patented **Lift System**, ALPHA iQ™ is lighter when removing it from the water. Monitor cleaning progress at any time through the **intuitive interface** of the iAquaLink™ application. ALPHA iQ™ is **upgradeable** thanks to possible optimisations and automatic remote updates.

PATENTED CYCLONE SUCTION

CYCLONIC SUCTION

Patented technology for powerful cleaning

> HOW DOES IT WORK?

Thanks to its unique design, Vortex cleaners feature **Cyclonic Suction** : the flow is **keeping debris in suspension inside the filter** and allows a longer lasting suction while **limiting the clogging.**

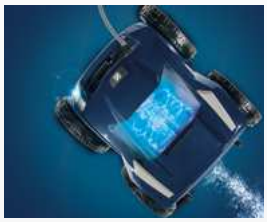

Robotic cleaners equipped with cyclonic suction can be found here:
RV5300, RV5380, RV5600, RA6300 iQ, RA 6500 iQ and RA 6700 iQ

PATENTED LIFT SYSTEM®

LIFT SYSTEM

Patented innovation for easier removal from the water

> 20% LESS EFFORT

The robotic cleaner positions itself on the chosen wall and cleans right up to the water line. Then a powerful waterjet propels it from the water: **which means you can remove the robot from the water with just 20% of the effort**.

Robotic cleaners equipped with cyclonic suction can be found here:
RV 5380, **RV 5600**, **RA 6300 iQ, RA 6500 iQ, RA 6570 iQ** and **RA 6700 iQ.**

SensorNavSystem™

SENSOR NAV SYSTEM

Smart navigation system for efficient and customized cleaning

> PERSONALISED CLEANING OF EACH POOL

Sensor Nav System ™ gathers different embedded features which enable the robotic cleaners to learn all about each pool and to adapt its cleaning in the smartest way.

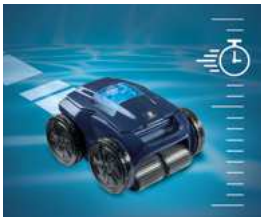

- Recognition and analysis of the pool dimensions and shape to provide an optimized navigation pattern and cleaning time for each pool.
- Pressure sensor inside allowing the cleaner to climb the walls, reach and steadily brush the waterline whatever the depth is.
- Focusing on common dirty areas such as bottom of the walls or flat areas of the pool

Robotic cleaners equipped with Smart Nav system™ can be found here: **RA 6300 iQ, RA 6500 iQ** and **RA 6700 iQ**

SWIVEL

Avoid cable tangling

> HOW DOES IT WORK?

Automatic swivel system prevents cable tangling during cleaner operation in the pool. **The cleaner efficiency is optimized and the cable storage is easier.**

Robots equipped with Swivel can be found here: **RV 5380, RV 5600, RA 6300 iQ, RA 6500 iQ** and **RA 6700 iQ**

4-WHEEL DRIVE (4WD)

Effective cleaning of all surfaces

> GETTING OVER OBSTACLES MORE EASILY

Equipped with **4-wheel drive**, robots from the **Vortex™ PRO 4WD** and **ALPHA iQ™** ranges adapt to all situations.

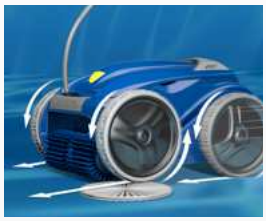

> OPTIMAL COVERAGE AND PERFECT GRIP

Thanks to their excellent grip, robots from the Vortex™ **PRO 4WD** and **ALPHA iQ™** ranges get into the tiniest corners of the pool and clean **all kinds of surface**. The robots ensure **the pool is cleaned perfectly**.

Robotic cleaners equipped with 4 Wheel-drive can be found here:
RV5300, RV5380, RV5600, RA6300 iQ, RA 6500 iQ and **RA 6700iQ**

PUSH'N'GO™

Patented innovation for easy access to the filter

> ACCESS THE FILTER IN JUST 1 CLICK

To make the filter even easier to access, Zodiac® created Push'n'Go™, an exclusive system that combines **comfort and ease of handling**.

> HOW DOES IT WORK?

Click the button located on the top of the robotic cleaner to raise the handle. Then pull it to remove the robotic cleaner's filter basket.

Robots equipped with Push'n'Go™ can be found here: **RC 4380, RC 4400, RC 4401** and **RC 4402**

> ELECTRIC CLEANERS

A stand-alone and efficient solution

COMPARATIVE TABLE OF RANGES TECHNICAL SPECIFICATIONS		RT 2100	RT 3200	RC 4380	RC 4400 RC 4402	RV 5300
Types of pools	Surfaces	Liner, polyester hull, reinforced PVC, painted concrete, tiles (dedicated brushes)	Liner, polyester hull, reinforced PVC, painted concrete, tiles (dedicated brushes)	Liner, reinforced PVC, painted concrete Polyester hull & tiles with dedicated brushes	Liner, reinforced PVC, painted concrete Polyester hull & tiles with dedicated brushes	Liner, polyester hull, reinforced PVC, painted concrete, tiles
	Shapes	Rectangular, oval, free shape	Rectangular, oval, free shape	Rectangular, oval, free shape	Rectangular, oval, free shape	Rectangular, oval, free shape
	Bottom	Flat, gentle slope, composite slope	Flat, gentle slope, composite slope	Flat, gentle slope, composite slope, diamond shape	Flat, gentle slope, composite slope, diamond shape	Flat, gentle slope, composite slope, diamond shape
	Size	8 x 4 m (14m cable)	9 x 4 m (16m cable)	10 x 5 m (15m cable)	10 x 5 m (15m cable)	12 x 6 m (18m cable)
Performance	Traction	Tracks	Tracks	Tracks	Tracks	4 WD
	Cleaning areas	Floor	Floor / walls	Floor / walls / water line	Floor / walls / water line	Floor / walls / water line
	Filtering level	100µ	100µ	100µ	100µ	100µ
	Filter capacity	3L	3L	3,7L	3,7L	5L
	Swivel	-	-	-	-	-
	Sensor Nav System™	-	-	-	-	-
	Remote control	-	-	-	-	-
	Contact + brushes	-	-	-	-	✓
Cycles	Number of cycles	1	1	2	6	2
	Cleaning cycles	Floor only	Floor / Walls	Floor / walls / water line Floor only	Floor / walls / water line Floor only	Floor / Walls / Waterline Floor only
	Manual cleaning time adjustment	-	-	-	✓	-
Ease of use	iAqualink™ app control	-	-	-	-	-
	Lift System	-	-	-	-	-
	7-day timer	-	-	-	-	-
	Full filter indicator	-	-	-	✓	✓
	Transparent window	-	✓	✓	✓	-
	Type of filter	Rigid Filter canister with top access	Rigid Filter canister with top access	Rigid Filter canister with top access	Rigid Filter canister with top access	Rigid Filter canister with top access
	Trolley	-	-	-	✓	✓
Advanced app features	Water temperature display	-	-	-	-	-
	Spot cleaning mode	-	-	-	-	-
	Warranty	2 years	2 years	2 years	2 years	3 years

COMPARATIVE TABLE OF RANGES

TECHNICAL SPECIFICATIONS

		RV 5380	RV 5600	RA 6300 iQ	RA 6500 iQ	RA 6700 iQ
Types of pools	Surfaces	Liner, polyester hull, reinforced PVC, painted concrete, tiles	Liner, polyester hull, reinforced PVC, painted concrete, tiles	Liner, polyester hull, reinforced PVC, painted concrete, tiles	Liner, polyester hull, reinforced PVC, painted concrete, tiles	Liner, polyester hull, reinforced PVC, painted concrete, tiles
	Shapes	Rectangular, oval, free shape	Rectangular, oval, free shape	Rectangular, oval, free shape	Rectangular, oval, free shape	Rectangular, oval, free shape
		Flat, gentle slope, composite slope, diamond shape	Flat, gentle slope, composite slope, diamond shape	Flat, gentle slope, composite slope, diamond shape	Flat, gentle slope, composite slope, diamond shape	Flat, gentle slope, composite slope, diamond shape
	Size	12 x 6 m (18m cable)	20 x 10 m (25m cable)	12 x 6 m (18m cable)	12 x 6 m (18m cable)	15 x 7 m (21m cable)
Performance	Traction	4 WD	4 WD	4 WD	4 WD	4 WD
	Cleaning areas	Floor / walls / water line	Floor / walls / water line	Floor / walls / water line	Floor / walls / water line	Floor / walls / water line
	Filtering level	100µ	100µ	60µ	60µ	60µ
	Filter capacity	5L	5L	5L	5L	5L
	Swivel	✓	✓	✓	✓	✓
	Sensor Nav System™	-	-	✓	✓	✓
	Remote control	-	✓	-	in app	in app
	Contact + brushes	✓	✓	✓	✓	✓
Cycles	Number of cycles	2	Multiple	2	Multiple	Multiple
	Cleaning cycles	Floor / Walls / Waterline Floor only	Floor / Walls / Waterline Floor only Waterline only	Quick : Floor only Smart : Floor / Walls / Waterline	Quick : Floor only Smart : Floor / Walls / Waterline Ultra : Floor / Walls / Waterline	Quick : Floor only Smart : Floor / Walls / Waterline Ultra : Floor / Walls / Waterline / Waterline only
	Manual cleaning time adjustment	-	✓	-	✓	✓
Ease of use	iAqualink™ app control	-	-	✓	✓	✓
	Lift System	✓	✓	✓	✓	✓
	7-day timer	-	✓	-	in app	in app
	Full filter indicator	✓	✓	✓	✓	✓
	Transparent window	-	-	✓	✓	✓
	Type of filter	Rigid Filter canister with top access	Rigid Filter canister with top access	Rigid Filter canister with top access	Rigid Filter canister with top access	Rigid Filter canister with top access
	Trolley	✓	✓	✓	✓	✓
Advanced app features	Water temperature display	-	-	-	-	in app
	Spot cleaning mode	-	-	-	-	in app
	Warranty	3 years	3 years	4 years*	4 years*	4 years*

* 3 years + 1 year if the cleaner is paired to iAqualink™

> TORNAX PRO

Efficiency, pure and simple

Cleans the pool floor
(RT 2100)

Cleans floor and walls
(RT 3200)

Light for effortless handling

Easy-to-clean filter

COMPARATIVE TABLE OF RANGES

TECHNICAL SPECIFICATIONS		RT2100	RT 3200
Types of pools	Surfaces	Liner, polyester hull, reinforced PVC, painted concrete, tiles (dedicated brushes)	Liner, polyester hull, reinforced PVC, painted concrete, tiles (dedicated brushes)
	Shapes	Rectangular, oval, free shape	Rectangular, oval, free shape
	Size	8 x 4 m (14m cable)	9 x 4 m (16m cable)
Performance	Traction	Tracks	Tracks
	Cleaning areas	Floor	Floor / walls
	Filtering level	100µ	100µ
	Filter capacity	3L	3L
	Swivel	-	-
	Sensor Nav System™	-	-
	Remote control	-	-
	Contact + brushes	-	-
Cycles	Number of cycles	1	1
	Cleaning cycles	Floor only	Floor / Walls
	Manual cleaning time adjustment	-	-
Ease of use	iAqualink app control	-	-
	Lift System	-	-
	7-day timer	-	-
	Full filter indicator	-	-
	Transparent window	-	✓
	Type of filter	Rigid Filter canister with top access	Rigid Filter canister with top access
	Trolley	-	-
	Warranty	2 years	2 years

RT 2100 TORNAX PRO

Pool Cleaners > Electrics > RT 2100 TORNAX PRO

2 YEAR WARRANTY

EFFICIENCY, PURE AND SIMPLE

+ Efficient floor cleaning
+ Lightweight for effortless handling
+ Easy clean filter

PRODUCT REFERENCE

WR000092

ACCESSORIES INCLUDED IN THE PACK

Control box	Fine Filter canister 100µ	Control box base

FOR WHICH TYPE OF POOLS?

Types of pools	Private in-ground pools and above-ground pools with rigid walls, maximum 8 x 4 m
Pool shapes	Rectangular, oval, free shape
All Floors	Flat, gentle slope, composite slope
Pool surfaces	Liner, polyester hull, reinforced PVC, painted concrete, Tiles *

DESCRIPTION

Cleaning areas	Floor
Number / Length of cleaning cycles	1 cycle - Floor : 2h30
Power supply	Autonomous, connected to 230V mains supply before the transformer
Steering	Pre-programmed
Drive system	Tracks
Transmission	Gear transmission
Brushes	Yes
Safety	Deck system, out of water safety, diagnostic, electronic motor protector
Filtration system / access	Rigid Filter canister with access over the cleaner
Units / pallet	36

TECHNICAL SPECIFICATIONS

Number of motors	2
Control box supply	100-240 VAC ; 50 / 60 Hz
Power supply	30 VDC
Operating power	100 W
Cable length	14 m
Cleaner size (L x W x h)	37 x 29 x 30 cm
Packaging size (L x W x h)	56 x 37 x 38 cm
Cleaner weight	5,5 kg
Packaging weight	10 kg
Filtering surface and level	480 cm² / 100µ
Filtering capacity	3 L
Inlet suction size	17 cm

SPARE PARTS Spare parts p.198

OPTIONAL ACCESSORIES (NOT INCLUDED)

	Ultra-fine filter canister 60µ	Fine filter canister 100µ	Large debris filter canister 200µ	Trolley	Special tile brush (unit)
Reference	R0763100	R0762900	R0763000	R0767600	R0774900

*For optimal cleaner behavior in some tile pools, it might be necessary to use the specific tile brush accessory.

9 317545 022420

RT 3200 TORNAX PRO

Pool Cleaners > Electrics > RT 3200 TORNAX PRO

2 YEAR WARRANTY

EFFICIENCY, PURE AND SIMPLE

+ Efficient floor and walls cleaning
+ Lightweight for effortless handling
+ Easy clean filter

PRODUCT REFERENCE

WR000093

ACCESSORIES INCLUDED IN THE PACK

Control box	Fine Filter canister 100µ	Control box base

FOR WHICH TYPE OF POOLS?

Types of pools	Private in-ground pools and above-ground pools with rigid walls, maximum 9 x 4 m
Pool shapes	Rectangular, oval, free shape
All Floors	Flat, gentle slope, composite slope
Pool surfaces	Liner, polyester hull, reinforced PVC, painted concrete, Tiles *

DESCRIPTION

Cleaning areas	Floor / walls
Number / Length of cleaning cycles	1 cycle - Floor / walls : 3h
Power supply	Autonomous, connected to 230V mains supply before the transformer
Steering	Pre-programmed
Drive system	Tracks
Transmission	Gear transmission
Brushes	Yes
Safety	Deck system, out of water safety, diagnostic, electronic motor protector
Filtration system / access	Rigid Filter canister with access over the cleaner
Units / pallet	36

TECHNICAL SPECIFICATIONS

Number of motors	2
Control box supply	100-240 VAC ; 50 / 60 Hz
Power supply	30 VDC
Operating power	100 W
Cable length	16,5m
Cleaner size (L x W x h)	37 x 29 x 30 cm
Packaging size (L x W x h)	56 x 37 x 38 cm
Cleaner weight	5,5 kg
Packaging weight	11 kg
Filtering surface and level	480 cm² / 100µ
Filtering capacity	3 L
Inlet suction size	17 cm

SPARE PARTS Spare parts p198

OPTIONAL ACCESSORIES (NOT INCLUDED)

	Ultra-fine filter canister 60µ	Fine filter canister 100µ	Large debris filter canister 200µ	Trolley	Special tile brush (unit)
Reference	R0763100	R0762900	R0763000	R0767600	R0774900

*For optimal cleaner behavior in some tile pools, it might be necessary to use the specific tile brush accessory.

9 317545 022437

> CYCLONX™ PRO

The essentials of Zodiac® technology

PUSH'N'GO™

Push'n'Go™ system
(easy access to the filter)

Filter basket
and large capacity (3.7 L)

Tracks

Filter basket
and large capacity (3.7 L)

Multiple cleaning areas
(floor, walls, water line)

Control unit

Transport cart
(supplied with the cleaner or as an accessory)

COMPARATIVE TABLE OF RANGES

TECHNICAL SPECIFICATIONS

		RC 4380	RC 4400	RC 4402
Types of pools	Surfaces	Liner, reinforced PVC, painted concrete Polyester hull & tiles with dedicated brushes	Liner, reinforced PVC, painted concrete Polyester hull & tiles with dedicated brushes	Polyester hull and tile (slippery pools)
	Shapes	Rectangular, oval, free shape	Rectangular, oval, free shape	Rectangular, oval, free shape
	Size	10 x 5 m (15m cable)	12 x 6 m (18m cable)	12 x 6 m (18m cable)
Performance	Traction	Tracks	Tracks	Tracks
	Cleaning areas	Floor / walls / waterline	Floor / walls / waterline	Floor / walls / waterline
	Filtering level	100µ	100µ	100µ
	Filter capacity	3,7L	3,7L	3,7L
	Swivel	-	-	-
	Sensor Nav System™	-	-	-
	Remote control	-	-	-
	Contact + brushes	-	-	-
Cycles	Number of cycles	2	6	6
	Cleaning cycles	Floor / walls / water line Floor only	Floor / walls / water line Floor only	Floor / walls / water line Floor only
	Manual cleaning time adjustment	-	✓	✓
Ease of use	iAqualink app control	-	-	-
	Lift System	-	-	-
	7-day timer	-	-	-
	Full filter indicator	-	✓	✓
	Transparent window	✓	✓	✓
	Type of filter	Rigid Filter canister with top access	Rigid Filter canister with top access	Rigid Filter canister with top access
	Trolley	-	✓	✓
	Warranty	2 years	2 years	2 years

RC 4380 CYCLONX™ PRO

Pool Cleaners > Electrics > RC 4380 CYCLONX™ PRO

2 YEAR WARRANTY

CONCENTRATED TECHNOLOGY

+ Optimal cleaning for the floor/walls/water line
+ Large suction capacity
+ Filter access at the push of a button

PUSH'N'GO™

PRODUCT REFERENCE

WR000240

ACCESSORIES INCLUDED IN THE PACK

Control box	Fine Filter canister 100µ	Control box base

FOR WHICH TYPE OF POOLS?

Types of pools	Private in-ground pools and above-ground pools with rigid walls, maximum 10 x 5 m
Pool shapes	Rectangular, oval, free shape
All Floors	Flat, gentle slope, composite slope, diamond shape
Pool surfaces	Liner, reinforced PVC, painted concrete , polyester hull, Tiles : dedicated brushes kit

DESCRIPTION

Cleaning areas	Floor / walls / waterline
Number / Length of cleaning cycles	2 cycles : - Floor «Deep Clean» : 1h30 - Floor / walls / waterline : 1h30
Power supply	Autonomous, connected to 230V mains supply before the transformer
Steering	Pre-programmed
Drive system	Tracks
Transmission	Gear transmission
Brushes	Yes
Lift System	no
Transparent window	Yes
Full filter indicator	No
Remote control	No
Safety	Deck system, out of water safety, diagnostic, electronic motor protector
Filtration system / access	Rigid Filter canister with access over the cleaner
Units / pallet	20

TECHNICAL SPECIFICATIONS

Number of motors	2
Control box supply	200-240 VAC ; 50 / 60 Hz
Power supply	30 VDC
Operating power	150 W
Cable length / Hose length	15 m
Cleaner size (L x W x h)	41 x 42 x 28 cm
Packaging size (L x W x h)	56 x 56 x 38 cm
Cleaner weight	9 kg
Packaging weight	17,1 kg
Filtering surface and level	850 cm² / 100µ
Filtering capacity	3,7 L
Inlet suction size / Cleaned width	22 cm

OPTIONAL ACCESSORIES (NOT INCLUDED)

	Ultra-fine filter canister 60µ	Large debris filter canister 200µ	Fine filter canister 100µ	Protective cover	Trolley	Kit for polyester hull pools (2 brushes)	Kit for slippery surfaces (2 brushes)
Reference	R0632602	R0632601	R0632600	R0568100	R0639500	R0697600	R0718600

9 317545 272252

RC 4400 CYCLONX™ PRO

Pool Cleaners > Electrics > RC 4400 CYCLONX™ PRO

2 YEAR WARRANTY

CONCENTRATED TECHNOLOGY

+ Optimal cleaning for the floor/walls/water line
+ Large suction capacity
+ Filter access at the push of a button

PUSH'N'GO™

PRODUCT REFERENCE

WR000021

ACCESSORIES INCLUDED IN THE PACK

Trolley	Control box	Fine Filter canister 100µ

FOR WHICH TYPE OF POOLS?

Types of pools	Private in-ground pools and above-ground pools with rigid walls, maximum 12 x 6 m
Pool shapes	Rectangular, oval, free shape
All Floors	Flat, gentle slope, composite slope, diamond shape
Pool surfaces	Liner, reinforced PVC, painted concrete , polyester hull, Tiles : dedicated brushes kit

DESCRIPTION

Cleaning areas	Floor / walls / waterline
Number / Length of cleaning cycles	6 cycles : - Floor «Deep Clean» : 1h, 1h30, 2h - Floor / walls / waterline : 1h, 1h30, 2h
Power supply	Autonomous, connected to 230V mains supply before the transformer
Steering	Pre-programmed
Drive system	Tracks
Transmission	Gear transmission
Brushes	Yes
Lift System	no
Transparent window	Yes
Full filter indicator	Yes
Remote control	No
Safety	Deck system, out of water safety, diagnostic, electronic motor protector
Filtration system / access	Rigid Filter canister with access over the cleaner
Units / pallet	16

TECHNICAL SPECIFICATIONS

Number of motors	2
Control box supply	200-240 VAC ; 50 / 60 Hz
Power supply	30 VDC
Operating power	150 W
Cable length	18m
Cleaner size (L x W x h)	41 x 42 x 28 cm
Packaging size (L x W x h)	56 x 56 x 46 cm
Cleaner weight	9,5 kg
Packaging weight	19,1 kg
Filtering surface and level	850 cm² / 100µ
Filtering capacity	3,7 L
Inlet suction size	22 cm

SPARE PARTS Spare parts p.200

OPTIONAL ACCESSORIES (NOT INCLUDED)

	Ultra-fine filter canister 60µ	Large debris filter canister 200µ	Fine filter canister 100µ	Protective cover	Kit for polyester hull pools (2 brushes)	Kit for slippery surfaces (2 brushes)
Reference	R0632602	R0632601	R0632600	R0568100	R0697600	R0718600

9 317545 014135

RC 4401 CYCLONX™ PRO

Pool Cleaners > Electrics > RC 4401 CYCLONX™ PRO

2 YEAR WARRANTY

CONCENTRATED TECHNOLOGY

Adapted for polyester hull
+ Optimal cleaning for the floor/walls/water line
+ Large suction capacity
+ Filter access at the push of a button

PUSH'N'GO™

Within the limits of remaining stocks

PRODUCT REFERENCE

WR000040

ACCESSORIES INCLUDED IN THE PACK

Trolley	Control box	Fine Filter canister 100µ

FOR WHICH TYPE OF POOLS?

Types of pools	Private in-ground pools and above-ground pools with rigid walls, maximum 12 x 6 m
Pool shapes	Rectangular, oval, free shape
All Floors	Flat, gentle slope, composite slope, diamond shape
Pool surfaces	Polyester hull pools

DESCRIPTION

Cleaning areas	Floor / walls / waterline
Number / Length of cleaning cycles	6 cycles : - Floor «Deep Clean» : 1h, 1h30, 2h - Floor / walls / waterline : 1h, 1h30, 2h
Power supply	Autonomous, connected to 230V mains supply before the transformer
Steering	Pre-programmed
Drive system	Tracks
Transmission	Gear transmission
Brushes	Yes
Lift System	no
Transparent window	Yes
Full filter indicator	Yes
Remote control	No
Safety	Deck system, out of water safety, diagnostic, electronic motor protector
Filtration system / access	Rigid Filter canister with access over the cleaner
Units / pallet	16

TECHNICAL SPECIFICATIONS

Number of motors	2
Control box supply	200-240 VAC ; 50 / 60 Hz
Power supply	30 VDC
Operating power	150 W
Cable length	18m
Cleaner size (L x W x h)	41 x 42 x 28 cm
Packaging size (L x W x h)	56 x 56 x 46 cm
Cleaner weight	9,5 kg
Packaging weight	19,1 kg
Filtering surface and level	850 cm² / 100µ
Filtering capacity	3,7 L
Inlet suction size	22 cm

SPARE PARTS Spare parts p.200

OPTIONAL ACCESSORIES (NOT INCLUDED)

	Ultra-fine filter canister 60µ	Large debris filter canister 200µ	Fine filter canister 100µ	Protective cover
Reference	R0632602	R0632601	R0632600	R0568100

9 317545 014401

RC 4402 CYCLONX™ PRO

2 YEAR WARRANTY

CONCENTRATED TECHNOLOGY

Adapted for pools with slippery surfaces (polyester hull, tile)
+ Optimal cleaning for the floor/walls/water line
+ Large suction capacity
+ Filter access at the push of a button

PUSH'N'GO™

PRODUCT REFERENCE

WR000239

ACCESSORIES INCLUDED IN THE PACK

Trolley	Control box	Fine Filter canister 100µ

FOR WHICH TYPE OF POOLS?

Types of pools	Private in-ground pools and above-ground pools with rigid walls, maximum 12 x 6 m
Pool shapes	Rectangular, oval, free shape
All Floors	Flat, gentle slope, composite slope, diamond shape
Pool surfaces	Slippery surfaces (polyester hull, tile)

DESCRIPTION

Cleaning areas	Floor / walls / waterline
Number / Length of cleaning cycles	6 cycles : - Floor «Deep Clean» : 1h, 1h30, 2h - Floor / walls / waterline : 1h, 1h30, 2h
Power supply	Autonomous, connected to 230V mains supply before the transformer
Steering	Pre-programmed
Drive system	Tracks
Transmission	Gear transmission
Brushes	Yes
Lift System	no
Transparent window	Yes
Full filter indicator	Yes
Remote control	No
Safety	Deck system, out of water safety, diagnostic, electronic motor protector
Filtration system / access	Rigid Filter canister with access over the cleaner
Units / pallet	16

TECHNICAL SPECIFICATIONS

Number of motors	2
Control box supply	200-240 VAC ; 50 / 60 Hz
Power supply	30 VDC
Operating power	150 W
Cable length / Hose length	18m
Cleaner size (L x W x h)	41 x 42 x 28 cm
Packaging size (L x W x h)	56 x 56 x 46 cm
Cleaner weight	9,5 kg
Packaging weight	19,1 kg
Filtering surface and level	850 cm² / 100µ
Filtering capacity	3,7 L
Inlet suction size / Cleaned width	22 cm

SPARE PARTS Spare parts p.200

OPTIONAL ACCESSORIES (NOT INCLUDED)

	Ultra-fine filter canister 60µ	Large debris filter canister 200µ	Fine filter canister 100µ	Protective cover
Reference	R0632602	R0632601	R0632600	R0568100

9 317545 272245

> VORTEX™ 4WD RANGE
Ultimate power

COMMON FEATURES OF THE PRO RANGE

3 filtration levels available

Handle positioned in front of the cleaner and water discharged at the rear

Vortex™ technology: cyclone suction powerful an long lasting suction

Active brushes

Filter basket with easy access and large capacity (5 L)

Patented Lift System*

Extra-wide **suction inlet**

Filter full indicator

*depending on model

COMPARATIVE TABLE OF RANGES
TECHNICAL SPECIFICATIONS

		RV 5300	RV 5380	RV 5600
Types of pools	Surfaces	Liner, polyester hull, reinforced PVC, painted concrete, tiles	Liner, polyester hull, reinforced PVC, painted concrete, tiles	Liner, polyester hull, reinforced PVC, painted concrete, tiles
	Shapes	Rectangular, oval, free shape	Rectangular, oval, free shape	Rectangular, oval, free shape
	Size	12 x 6 m (18m cable)	12 x 6 m (18m cable)	20 x 10 m (25m cable)
Performance	Traction	4 WD	4 WD	
	Cleaning areas	Floor / walls / waterline	Floor / walls / waterline	Floor / walls / waterline
	Filtering level	100µ	100µ	100µ
	Filter capacity	5L	5L	5L
	Swivel	-	✓	✓
	Sensor Nav System™	-	-	-
	Remote control	-	-	✓
	Contact + brushes	✓	✓	✓
Cycles	Number of cycles	2	2	Multiple
	Cleaning cycles	Floor / Walls / Waterline Floor only	Floor / Walls / Waterline Floor only	Floor / Walls / Waterline Floor only Waterline only
	Manual cleaning time adjustment	-	-	✓
Ease of use	iAqualink™ app control	-	-	-
	Lift System	-	✓	✓
	7-day timer	-	-	✓
	Full filter indicator	✓	✓	✓
	Transparent window	-	-	-
	Type of filter	Rigid Filter canister with top access	Rigid Filter canister with top access	Rigid Filter canister with top access
	Trolley	✓	✓	✓
	Warranty	3 years	3 years	3 years

RV 5300 VORTEX™ PRO 4WD

3 YEAR WARRANTY

ULTIMATE POWER IN 4X4

+ Ultra-powerful & long lasting suction
+ All-terrain cleaner
+ Extra large suction capacity

PATENTED CYCLONE SUCTION

PRODUCT REFERENCE

WR000161

ACCESSORIES INCLUDED IN THE PACK

Trolley	Control box	Fine Filter canister 100µ	Contact + Brushes

FOR WHICH TYPE OF POOLS?

Types of pools	Private in-ground pools and above-ground pools with rigid walls, maximum 12 x 6 m
Pool shapes	Rectangular, oval, free shape
All Floors	Flat, gentle slope, composite slope, diamond shape
Pool surfaces	Tiles, liner, polyester hull, reinforced PVC, painted concrete

DESCRIPTION

Cleaning areas	Floor / walls / waterline
Number / Length of cleaning cycles	2 cycles : - Floor only : 1h30 - Floor / walls / waterline : 2h30
Power supply	Autonomous, connected to 230V mains supply before the transformer
Steering	Pre-programmed
Drive system	4 wheel drive
Transmission	Gear transmission
Brushes	Yes (Contact + Brushes)
Lift System	No
Full filter indicator	Yes
Remote control	No
Safety	Deck system, out of water safety, diagnostic, electronic motor protector
Filtration system / access	Rigid Filter canister with access over the cleaner
Units / pallet	16

TECHNICAL SPECIFICATIONS

Number of motors	3
Control box supply	200-240 VAC ; 50 / 60 Hz
Power supply	30 VDC
Operating power	150 W
Cable length	18m
Cleaner size (L x W x h)	43 x 48 x 27 cm
Packaging size (L x W x h)	56 x 56 x 46 cm
Cleaner weight	9,5 kg
Packaging weight	21 kg
Filtering surface and level	1180 cm² / 100µ
Filtering capacity	5 L
Inlet suction size	24,5 cm

SPARE PARTS Spare parts p.204

OPTIONAL ACCESSORIES (NOT INCLUDED)

	Ultra-fine filter canister 60µ	Fine filter canister 100µ	Large debris filter canister 200µ	Protective cover
Reference	R0638600	R0636600	R0643700	R0568100

9 317545 025841

RV 5380 VORTEX™ PRO 4WD

Pool Cleaners > Electrics > RV 5380 VORTEX™ PRO 4WD

3 YEAR WARRANTY

ULTIMATE POWER IN 4X4

+ Ultra-powerful & long lasting suction
+ All-terrain cleaner
+ Effortless removal from the water
+ Extra large suction capacity

NEW FOR 2020 | PATENTED CYCLONE SUCTION | PATENTED LIFT SYSTEM® | SWIVEL

PRODUCT REFERENCE

WR000225

ACCESSORIES INCLUDED IN THE PACK

Trolley	Control box	Fine Filter canister 100µ	Contact + Brushes	Swivel

FOR WHICH TYPE OF POOLS?

Types of pools	Private in-ground pools and above-ground pools with rigid walls, maximum 12 x 6 m
Pool shapes	Rectangular, oval, free shape
All Floors	Flat, gentle slope, composite slope, diamond shape
Pool surfaces	Tiles, liner, polyester hull, reinforced PVC, painted concrete

DESCRIPTION

Cleaning areas	Floor / walls / waterline
Number / Length of cleaning cycles	2 cycles : - Floor only : 1h30 - Floor / walls / waterline : 2h30
Power supply	Autonomous, connected to 230V mains supply before the transformer
Steering	Pre-programmed
Drive system	4 wheel drive
Transmission	Gear transmission
Brushes	Yes (Contact + Brushes)
Lift System	Yes
Full filter indicator	Yes
Remote control	No
Safety	Deck system, out of water safety, diagnostic, electronic motor protector
Filtration system / access	Rigid Filter canister with access over the cleaner
Units / pallet	16

TECHNICAL SPECIFICATIONS

Number of motors	3
Control box supply	200-240 VAC ; 50 / 60 Hz
Power supply	30 VDC
Operating power	150 W
Cable length / Hose length	18m with Swivel
Cleaner size (L x W x h)	43 x 48 x 27 cm
Packaging size (L x W x h)	56 x 56 x 46 cm
Cleaner weight	9,5 kg
Packaging weight	21 kg
Filtering surface and level	1180 cm² / 100µ
Filtering capacity	5 L
Inlet suction size / Cleaned width	24,5 cm

OPTIONAL ACCESSORIES (NOT INCLUDED)

	Ultra-fine filter canister 60µ	Fine filter canister 100µ	Large debris filter canister 200µ	Protective cover
Reference	R0638600	R0636600	R0643700	R0568100

9 317545 271576

RV 5600 VORTEX™ PRO 4WD

Pool Cleaners > Electrics > RV 5600 VORTEX™ PRO 4WD

3 YEAR WARRANTY

ULTIMATE POWER IN 4X4

+ Ultra-powerful & long lasting suction
+ All-terrain cleaner
+ Effortless removal from the water
+ Extra large suction capacity

PATENTED CYCLONE SUCTION

PATENTED LIFT SYSTEM®

SWIVEL

PRODUCT REFERENCE

WR000064

ACCESSORIES INCLUDED IN THE PACK

Trolley	Control box	Fine Filter canister 100µ	Contact + Brushes	Kinetic remote control	Swivel

FOR WHICH TYPE OF POOLS?

Types of pools	Private in-ground pools and above-ground pools with rigid walls, maximum 20 x 10 m
Pool shapes	Rectangular, oval, free shape
All Floors	Flat, gentle slope, composite slope, diamond shape
Pool surfaces	Tiles, liner, polyester hull, reinforced PVC, painted concrete

DESCRIPTION

Cleaning areas	Floor / walls / waterline
Number / Length of cleaning cycles	Multiple from 0h30 to 3h30 - Floor only - Floor / walls / waterline - Waterline only
Integrated programming clock	7-days
Power supply	Autonomous, connected to 230V mains supply before the transformer
Steering	Pre-programmed
Drive system	4 wheel drive
Transmission	Gear transmission
Brushes	Yes (Contact + Brushes)
Lift System	Yes
Full filter indicator	Yes
Remote control	Yes
Safety	Deck system, out of water safety, diagnostic, electronic motor protector
Filtration system / access	Rigid Filter canister with access over the cleaner
Units / pallet	16

TECHNICAL SPECIFICATIONS

Number of motors	3
Control box supply	200-240 VAC ; 50 / 60 Hz
Power supply	30 VDC
Operating power	150 W
Cable length	25m with Swivel
Cleaner size (L x W x h)	43 x 48 x 27 cm
Packaging size (L x W x h)	56 x 56 x 46 cm
Cleaner weight	9,5 kg
Packaging weight	22,5 kg
Filtering surface and level	1180 cm² / 100µ
Filtering capacity	5 L
Inlet suction size	24,5 cm

OPTIONAL ACCESSORIES (NOT INCLUDED)

	Ultra-fine filter canister 60µ	Fine filter canister 100µ	Large debris filter canister 200µ	Protective cover
Reference	R0638600	R0636600	R0643700	R0568100

9 317545 017921

> ALPHA iQ™ PRO
ULTRA-EFFICIENCY COMBINED WITH INTELLIGENCE

RA 6700 iQ model

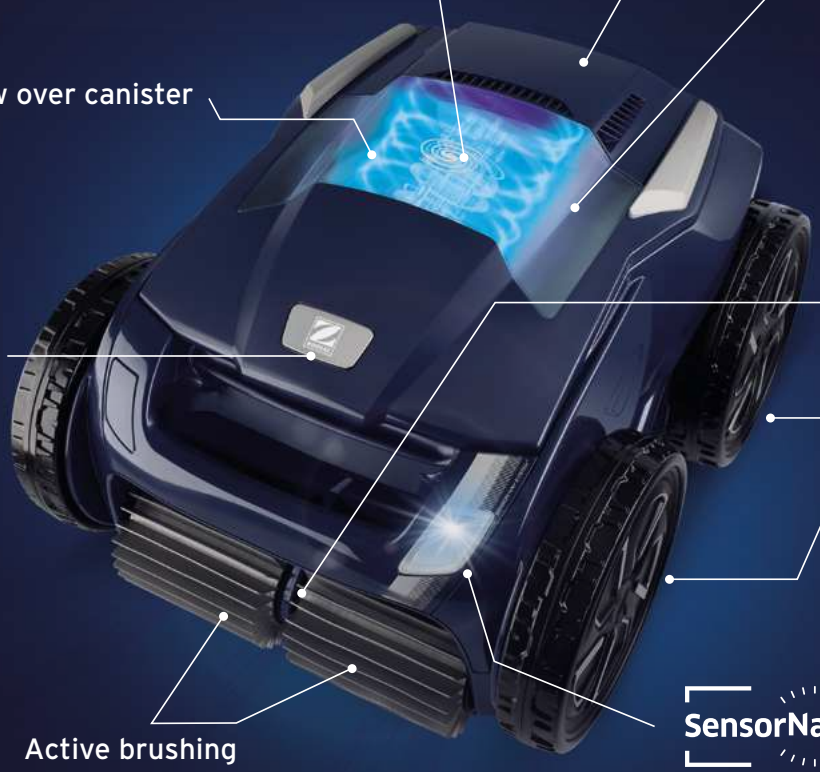

SensorNavSystem™

- Smart cycle: calculates the optimal cleaning time for each pool
- Pressure sensor: provides superior wall climbing and waterline cleaning
- Water Temperature Sensor

iAquaLink™ CONTROL

Wi-Fi Control through iAquaLink™ App
- Remote control mode
- 7 days timer
- Lift System
- Choice, start, stop and monitor the cycles
- Smart cleaning mode
- Display of water temperature

4 YEARS WARRANTY
3 years + 1 additional year if the robot is paired with the iAqualink™ application*
*See conditions in the warranty guide

> ALPHA iQ™ PRO
ULTRA-EFFICIENCY COMBINED WITH INTELLIGENCE

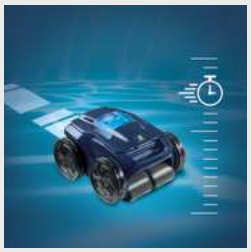

Personalised cleaning Sensor Nav Sytem™

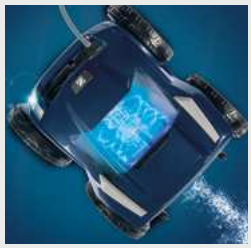

Patented Cyclone suction

Lift System: Easy-to-use and lighter removal from the water

Intuitive Wi-Fi connected control

COMPARATIVE TABLE OF RANGES

		RA 6300 iQ	RA 6500 iQ	RA 6700 iQ
Types of pools	Surfaces	Liner, polyester hull, reinforced PVC, painted concrete, tiles	Liner, polyester hull, reinforced PVC, painted concrete, tiles	Liner, polyester hull, reinforced PVC, painted concrete, tiles
	Shapes	Rectangular, oval, free shape	Rectangular, oval, free shape	Rectangular, oval, free shape
	Size	12 x 6 m (18m cable)	12 x 6 m (18m cable)	15 x 7 m (21m cable)
Performance	Traction	4 WD	4 WD	4 WD
	Cleaning areas	Floor / walls / waterline	Floor / walls / waterline	Floor / walls / waterline
	Filtering level	60µ	60µ	60µ
	Filter capacity	5L	5L	5L
	Swivel	✓	✓	✓
	Sensor Nav System™	✓	✓	✓
	Remote control	-	in app	in app
	Pressure sensor	-	✓	✓
	Contact + brushes	✓	✓	✓
Cycles	Number of cycles	2	Multiple	Multiple
	Cleaning cycles	Quick - Floor only Smart - Floor / Walls / Waterline	Quick - Floor only Smart - Floor / Walls / Waterline Ultra - Floor / Walls /Waterline	Quick : Floor only Smart : Floor / Walls / Waterline Ultra : Floor / Walls /Waterline Waterline only
	Manual cleaning time adjustment	-	✓	✓
Ease of use	iAqualink™ app control	✓	✓	✓
	Lift System	✓	✓	✓
	7-day timer	-	in app	in app
	Full filter indicator	✓	✓	✓
	Transparent window	✓	✓	✓
	Type of filter	Rigid Filter canister with top access	Rigid Filter canister with top access	Rigid Filter canister with top access
	Trolley	✓	✓	✓
Advanced app features	Water temperature display	-	-	in app
	Spot cleaning mode	-	-	in app
	Warranty	4 years*	4 years*	4 years*

* 3 years + 1 year if the cleaner is paired to iAqualink™

RA 6300 iQ ALPHA iQ™ PRO

4 YEAR WARRANTY*

ULTRA-EFFICIENCY COMBINED WITH INTELLIGENCE

+ Sensor Nav Sytem™: intelligent and personalised cleaning
+ Ultra-powerful & long lasting suction
+ Effortless removal from water
+ Wi-fi connected : intuitive interface and advanced functionalities in app from everywhere

Sensor Nav System™ · PATENTED CYCLONE SUCTION · PATENTED LIFT SYSTEM® · SWIVEL · iAquaLink CONTROL

PRODUCT REFERENCE

WR000199

ACCESSORIES INCLUDED IN THE PACK

Trolley	Control box	Ultra-Fine Filter canister 60µ	Contact + Brushes	Swivel	Free app

FOR WHICH TYPE OF POOLS?

Types of pools	Private in-ground pools and above-ground pools with rigid walls, maximum 12 x 6 m
Pool shapes	Rectangular, oval, free shape
All Floors	Flat, gentle slope, composite slope, diamond shape
Pool surfaces	Tiles, liner, polyester hull, reinforced PVC, painted concrete

DESCRIPTION

Cleaning areas	Floor / walls / waterline
Number / Length of cleaning cycles	2 cycles - Quick: floor only 1h15 - Smart: floor/ walls / waterline (calculated time)
Timer	No
Power supply	Autonomous, connected to 230V mains supply before the transformer
Steering	Pre-programmed
Drive system	4 wheel drive
Transmission	Gear transmission
Pressure sensor	No
Brushes	Yes (Contact + Brushes)
Lift System	Yes
Transparent window	Yes
Full filter indicator	Yes
Remote control	No
Water temperature measurement	No
Safety	Deck system, out of water safety, diagnostic, electronic motor protector
Filtration system / access	Rigid Filter canister with access over the cleaner
Units / pallet	16

TECHNICAL SPECIFICATIONS

Number of motors	3
Control box supply	200-240 VAC ; 50 / 60 Hz
Power supply	30 VDC
Operating power	150 W
Cable length / Hose length	18m with Swivel
Cleaner size (L x W x h)	43 x 48 x 27 cm
Packaging size (L x W x h)	56 x 56 x 46 cm
Cleaner weight	10 kg
Packaging weight	21 kg
Filtering surface and level	1180 cm² / 60µ
Filtering capacity	5 L
Inlet suction size / Cleaned width	24,5 cm

SPARE PARTS Spare parts p.210

OPTIONAL ACCESSORIES (NOT INCLUDED)

	Ultra-fine filter canister 60µ	Fine filter canister 100µ	Large debris filter canister 200µ	Protective cover
Reference	R0863500	R0863600	R0863700	R0568100

* 3 years + 1 year if the cleaner is paired to iAqualink™

9 317545 070841

RA 6500 iQ ALPHA iQ™ PRO

Pool Cleaners > Electrics > RA 6500 iQ ALPHA iQ™ PRO

4 YEAR WARRANTY*

ULTRA-EFFICIENCY COMBINED WITH INTELLIGENCE

+ Sensor Nav Sytem™: intelligent and personalised cleaning
+ Ultra-powerful & long lasting suction
+ Effortless removal from water
+ Wi-fi connected : intuitive interface and advanced functionalities in app from everywhere

Sensor Nav System™ | PATENTED CYCLONE SUCTION | PATENTED LIFT SYSTEM® | SWIVEL | iAquaLink CONTROL

PRODUCT REFERENCE

WR000198

ACCESSORIES INCLUDED IN THE PACK

Trolley	Control box	Ultra-Fine Filter canister 60µ	Contact + Brushes	Swivel	Free app

FOR WHICH TYPE OF POOLS?

Types of pools	Private in-ground pools and above-ground pools with rigid walls, maximum 12 x 6 m
Pool shapes	Rectangular, oval, free shape
All Floors	Flat, gentle slope, composite slope, diamond shape
Pool surfaces	Tiles, liner, polyester hull, reinforced PVC, painted concrete

DESCRIPTION

Cleaning areas	Floor / walls / waterline
Number / Length of cleaning cycles	Multiple from 0h30 to 3h30 with preset cycles: - Quick: floor only 1h15 - Smart: floor/ walls / waterline (calculated time) - Ultra: floor / walls / waterline (2h45)
Timer	7-days
Power supply	Autonomous, connected to 230V mains supply before the transformer
Steering	Pre-programmed
Drive system	4 wheel drive
Transmission	Gear transmission
Pressure sensor	Yes
Brushes	Yes (Contact + Brushes)
Lift System	Yes
Transparent window	Yes
Full filter indicator	Yes
Remote control	Remote control mode (with app)
Water temperature measurement	No
Safety	Deck system, out of water safety, diagnostic, electronic motor protector
Filtration system / access	Rigid Filter canister with access over the cleaner
Units / pallet	16

TECHNICAL SPECIFICATIONS

Number of motors	3
Control box supply	200-240 VAC ; 50 / 60 Hz
Power supply	30 VDC
Operating power	150 W
Cable length / Hose length	18m with Swivel
Cleaner size (L x W x h)	43 x 48 x 27 cm
Packaging size (L x W x h)	56 x 56 x 46 cm
Cleaner weight	10 kg
Packaging weight	21 kg
Filtering surface and level	1180 cm² / 60µ
Filtering capacity	5 L
Inlet suction size / Cleaned width	24,5 cm

SPARE PARTS Spare parts p.212

OPTIONAL ACCESSORIES (NOT INCLUDED)

	Ultra-fine filter canister 60µ	Fine filter canister 100µ	Large debris filter canister 200µ	Protective cover
Reference	R0863500	R0863600	R0863700	R0568100

* 3 years + 1 year if the cleaner is paired to iAqualink™

9 317545 070834

RA 6700 iQ ALPHA iQ™ PRO

4 YEAR WARRANTY*

ULTRA-EFFICIENCY COMBINED WITH INTELLIGENCE

+ Sensor Nav Sytem™: intelligent and personalised cleaning
+ Ultra-powerful & long lasting suction
+ Effortless removal from water
+ Wi-fi connected : intuitive interface and advanced functionalities in app from everywhere

Sensor Nav System™ · PATENTED CYCLONE SUCTION · PATENTED LIFT SYSTEM® · SWIVEL · iAquaLink CONTROL

PRODUCT REFERENCE

WR000197

ACCESSORIES INCLUDED IN THE PACK

Trolley	Control box	Ultra-Fine Filter canister 60µ	Contact + Brushes	Swivel	Free app

FOR WHICH TYPE OF POOLS?

Types of pools	Private in-ground pools and above-ground pools with rigid walls, maximum 15 x 7 m
Pool shapes	Rectangular, oval, free shape
All Floors	Flat, gentle slope, composite slope, diamond shape
Pool surfaces	Tiles, liner, polyester hull, reinforced PVC, painted concrete

DESCRIPTION

Cleaning areas	Floor / walls / waterline
Number / Length of cleaning cycles	Multiple from 0h30 to 3h30 with preset cycles: - Quick: floor only 1h15 - Smart: floor/ walls / waterline (calculated time) - Ultra: floor / walls / waterline (2h45) - Waterline only: 0h45
Timer	7-days
Power supply	Autonomous, connected to 230V mains supply before the transformer
Steering	Pre-programmed
Drive system	4 wheel drive
Transmission	Gear transmission
Pressure sensor	Yes
Brushes	Yes (Contact + Brushes)
Lift System	Yes
Transparent window	Yes
Full filter indicator	Yes
Remote control	Remote control mode (with app)
Water temperature measurement	Yes (info in app)
Safety	Deck system, out of water safety, diagnostic, electronic motor protector
Filtration system / access	Rigid Filter canister with access over the cleaner
Units / pallet	16

TECHNICAL SPECIFICATIONS

Number of motors	3
Control box supply	200-240 VAC ; 50 / 60 Hz
Power supply	30 VDC
Operating power	150 W
Cable length / Hose length	21m with Swivel
Cleaner size (L x W x h)	43 x 48 x 27 cm
Packaging size (L x W x h)	56 x 56 x 46 cm
Cleaner weight	10 kg
Packaging weight	22,3 kg
Filtering surface and level	1180 cm² / 60µ
Filtering capacity	5 L
Inlet suction size / Cleaned width	24,5 cm

SPARE PARTS Spare parts p.214

OPTIONAL ACCESSORIES (NOT INCLUDED)

	Ultra-fine filter canister 60µ	Fine filter canister 100µ	Large debris filter canister 200µ	Protective cover
Reference	R0863500	R0863600	R0863700	R0568100

* 3 years + 1 year if the cleaner is paired to iAqualink™

9 317545 070827

DIAGNOSTIC TOOLS

DIAG BOX

+ Simple system with display for off-line use (without a PC)
+ Possible out-of-water testing in off-line mode
+ Can be connected to a PC for full diagnostic check
+ Multiple light panel provided with colour coding for all products

WHICH PRODUCTS?

All Vortex™ products (including Vortex™1) All Tornax™
All CyclonX™ products
Lazernaut NT, Cybernaut™ NT (2010 ONWARDS)

TESTED ELEMENTS?

In off-line mode: box/motor block/cable/remote control

PRODUCT REFERENCE

Product reference: R0685300

Robot type	Elements to be tested	Type of cable to be connected
CyclonX™	Robot	GREY adapter
	Control unit	BLUE adapter
Vortex™ TornaX	Motor block	BROWN adapter
	Robot	Robot floating cable
	Control unit	GREEN adapter
Vortex™ 1	Robot	RED adapter
Lazernaut, Cybernaut™ NT (>2010)	Robot (via robot control unit)	YELLOW adapter

> HYDRAULIC ROBOT CLEANERS

A simple and affordable solution

COMPARATIVE TABLE OF RANGES

	Kontiki™ 2	T3®	T5® Duo	MX6™	MX9™
Pool Dimension max.	8 x 4 m	9 x 5 m	12 x 6 m	10 x 5 m	12 x 6 m
Number of pipes 1 m - Twist Lock pipe	8	10	12	10	12
Motion	Diaphragm	Diaphragm	Diaphragm	Mechanical	Mechanical
Suction	-	-	-	1 turbine	2 turbines with brushes
Pool floors					
Rectangular	•	•	•	•	•
Oval	•	•	•	•	•
Round		•	•	•	•
Free shape			•	•	•
Floor only	•	•			
Floor and walls			•	•	•
Flat	•	•	•	•	•
Gentle slope	•	•	•	•	•
Composit slope			•	•	•
Diamond shape					•
Minimum power required from the filtration pump	1/2 HP	1/2 HP	3/4HP	3/4 HP*	3/4 HP*
Warranty	2 years	2 years	2 years	2 years	2 years

* 1 HP needed for tile pools

STANDARD INSTALLATION

- The suction cleaner is connected directly to the vacuum point or skimmer. No electrical connection required.
- The ideal hose length for the pool equals the greatest distance that the cleaner can cover in the pool from the connection point (skimmer) to the farthest corner of the pool, plus a 1 metre section.
- For optimal installation, perform a flow test and adjust the flow rate using an adjusting valve.

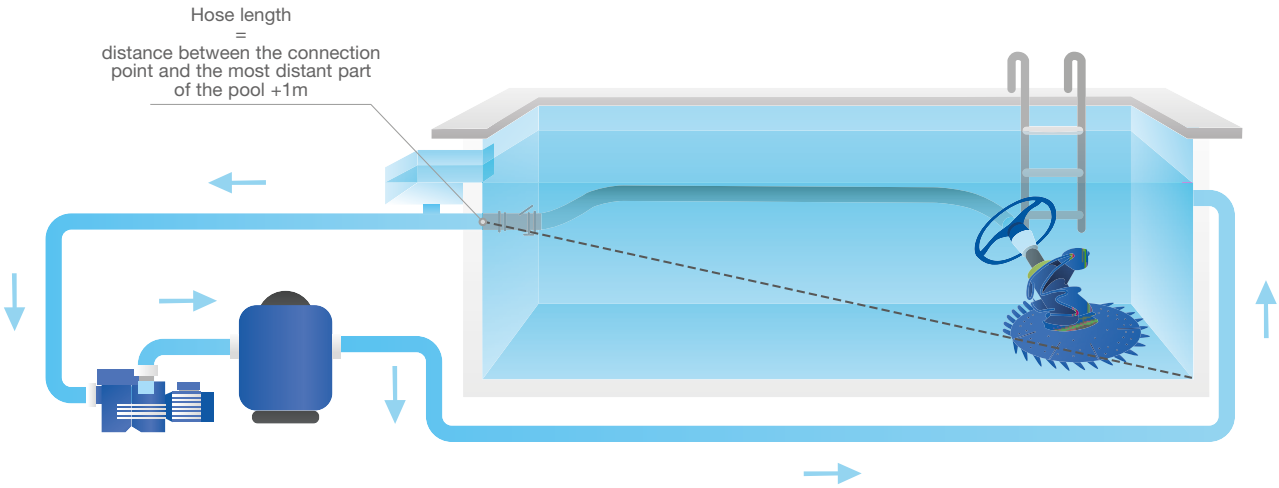

KONTIKI™ 2

Pool Cleaners > Hydraulics > KONTIKI™ 2

2 YEAR WARRANTY

+ Diaphragm: membrane technology
+ Finned disc: optimum mobility of the cleaner

ABOVE GROUND POOLS

PRODUCT REFERENCE

W70478

ACCESSORIES INCLUDED IN THE PACK

Adaptors (x2)	Hose deflectors (x2)

FOR WHICH TYPE OF POOLS?

Types of pools	Private above-ground pools with rigid walls, maximum 8 x 4 m
Pool shapes	Rectangular, oval
All Floors	Flat, gentle slope
Pool surfaces	Tiles, liner, polyester hull, reinforced PVC, painted concrete

DESCRIPTION

Cleaning areas	Floor
Cleaning cycles	Recomended 6h filtering in three 2h sessions
Power supply	Filtering group
Steering	Random
Installation	Suction line or skimmer
Motion	Diaphragm
Types of debris handled	Fine and medium
Units / pallet	24

TECHNICAL SPECIFICATIONS

Hose length	8 sections of 1 m
Cleaner size (L x W x h)	48 x 20 x 40 cm
Packaging size (L x W x h)	101 × 31,5 × 33 cm
Cleaner weight	1,3 kg
Packaging weight	5,5 kg
Filtering capacity	Pool filtering circuit
Cleaned width	40 cm
Displacement speed	6 m/min
Minimum required filter pump power	1/2 HP

SPARE PARTS Spare parts p.228

OPTIONAL ACCESSORIES (NOT INCLUDED)

	6 sections of 1 m	Flow gauge
Reference	W69100	W70335P

3 478580 704781

T3®

Pool Cleaners > Hydraulics > T3®

2 YEAR WARRANTY

+ DiaCyclone Diaphragm: even more powerful suction
+ Finned disc: optimum mobility of the cleaner

ALL TYPE OF LININGS

PRODUCT REFERENCE

W70674

ACCESSORIES INCLUDED IN THE PACK

Twist Lock Hoses	Wheel deflector	Flow gauge	Flowkeeper valve (skimmer)

FOR WHICH TYPE OF POOLS?

Types of pools	Private in-ground pools and above-ground pools with rigid walls, maximum 9 x 5 m
Pool shapes	Rectangular, oval
All Floors	Flat, gentle slope
Pool surfaces	Tiles, liner, polyester hull, reinforced PVC, painted concrete

DESCRIPTION

Cleaning areas	Floor
Cleaning cycles	Recomended 6h filtering in three 2h sessions
Power supply	Filtering group
Steering	Random
Installation	Suction line or skimmer
Motion	Diacyclone Diaphragm
Types of debris handled	Fine and medium
Units / pallet	27

TECHNICAL SPECIFICATIONS

Hose length	10 sections of 1 m
Cleaner size (L x W x h)	41 x 36 x 28 cm
Packaging size (L x W x h)	102,8 x 41,5 x 22,4 cm
Cleaner weight	1,2 kg
Packaging weight	6,8 kg
Filtering capacity	Pool filtering circuit
Cleaned width	30 cm
Displacement speed	6,5 m/min
Minimum required filter pump power	1/2 HP

SPARE PARTS Spare parts p.230

OPTIONAL ACCESSORIES (NOT INCLUDED)

	6 section of 1m Twist Lock hoses
Reference	W78055

3 478580 706747

T5®Duo

Pool Cleaners > Hydraulics > T5®Duo

2 YEAR WARRANTY

+ DiaCyclone Diaphragm: even more powerful suction
+ Flexible Duo Traction Control disc in 2 parts: optimum grip

ALL TYPES OF SWIMMING POOLS

ALL TYPE OF LININGS

PRODUCT REFERENCE

W78046

ACCESSORIES INCLUDED IN THE PACK

Twist Lock Hoses	Wheel deflector	Flow gauge	Flowkeeper valve (skimmer)

FOR WHICH TYPE OF POOLS?

Types of pools	Private in-ground pools and above-ground pools with rigid walls, maximum 12 x 6 m
Pool shapes	Rectangular, oval, free shape
All Floors	Flat, gentle slope, composite slope
Pool surfaces	Tiles, liner, polyester hull, reinforced PVC, painted concrete

DESCRIPTION

Cleaning areas	Floor and walls
Cleaning cycles	Recomended 6h filtering in three 2h sessions
Power supply	Filtering group
Steering	Random
Installation	Suction line or skimmer
Motion	Diacyclone Diaphragm
Types of debris handled	Fine and medium
Units / pallet	24

TECHNICAL SPECIFICATIONS

Hose length	12 sections of 1 m
Cleaner size (L x W x h)	44 x 43 x 22 cm
Packaging size (L x W x h)	99 × 45,5 × 29,5 cm
Cleaner weight	1,4 kg
Packaging weight	8,4 kg
Filtering capacity	Pool filtering circuit
Cleaned width	44 cm
Displacement speed	6 m/min
Minimum required filter pump power	3/4 HP

SPARE PARTS Spare parts p.232

OPTIONAL ACCESSORIES (NOT INCLUDED)

	6 section of 1m Twist Lock hoses
Reference	W78055

3 478580 780464

MX6™

Pool Cleaners > Hydraulics > MX6™

2 YEAR WARRANTY

+ Pre-programmed X-Drive navigation system : methodical cleaning of all areas
+ Turbo aspiration: a powerful turbine and one peripheral propeller
+ Traction using notched tracks: for perfect stability and total movement
+ Equipped with a flow regulator valve: automatically controls excess flow through cleaner for best performance and longevity

ALL TYPES OF SWIMMING POOLS

PRODUCT REFERENCE

W79102

ACCESSORIES INCLUDED IN THE PACK

Twist Lock Hoses	In-ground valve cuff	45° Elbow extended	45° Elbow	Flow Regulator Valve (cleaner)	Flowkeeper valve (skimmer)

FOR WHICH TYPE OF POOLS?

Types of pools	Private in-ground pools and above-ground pools with rigid walls, maximum 10 x 5 m
Pool shapes	Rectangular, oval, free shape
All Floors	Flat, gentle slope, composite slope
Pool surfaces	Tiles, liner, polyester hull, reinforced PVC, painted concrete

DESCRIPTION

Cleaning areas	Floor and walls
Cleaning cycles	Recomended 6h filtering in three 2h sessions
Power supply	Filtering group
Steering	Random
Installation	Suction line or skimmer
Motion	Mechanical suction : turbine
Types of debris handled	Fine and medium
Units / pallet	30

TECHNICAL SPECIFICATIONS

Hose length	10 sections of 1 m
Cleaner size (L x W x h)	31 x 19 x 22 cm
Packaging size (L x W x h)	102 x 23 x 37 cm
Cleaner weight	2,5 kg
Packaging weight	8,2 kg
Filtering capacity	Pool filtering circuit
Cleaned width	25 cm
Displacement speed	8 m/min
Minimum required filter pump power	3/4 HP (1 HP forTile pools)

OPTIONAL ACCESSORIES (NOT INCLUDED)

	6 section of 1m Twist Lock hoses	Cyclonic™ Leaf Catcher
Reference	W78055	W37110

9 317545 014838

MX9™

Pool Cleaners > Hydraulics > MX9™

2 YEAR WARRANTY

+ Pre-programmed X-Drive navigation system: methodical cleaning of all areas
+ Turbo aspiration: a powerful turbine and two peripheral propellers with brushes
+ Exclusive cleaning mode thanks to scrubbing brushes
+ Traction using notched tracks: for perfect stability and total movement
+ Twist Lock Hoses : easy and safe connection

ALL TYPES OF SWIMMING POOLS

PRODUCT REFERENCE

WS000033

ACCESSORIES INCLUDED IN THE PACK

Cyclonic scrubbing brushes	Twist Lock Hoses	In-ground valve cuff	45° Elbow extended	45° Elbow	Flow Regulator Valve (cleaner)	Flowkeeper valve (skimmer)

FOR WHICH TYPE OF POOLS?

Types of pools	Private in-ground pools and above-ground pools with rigid walls, maximum 12 x 6 m
Pool shapes	Rectangular, oval, free shape
All Floors	Flat, gentle slope, composite slope
Pool surfaces	Tiles, liner, polyester hull, reinforced PVC, painted concrete

DESCRIPTION

Cleaning areas	Floor and walls
Cleaning cycles	Recomended 6h filtering in three 2h sessions
Power supply	Filtering group
Steering	Random
Installation	Suction line or skimmer
Suction system	Mechanical suction : turbine
Types of debris handled	Fine and medium
Units / pallet	30

TECHNICAL SPECIFICATIONS

Hose length	12 sections of 1 m
Cleaner size (L x W x h)	41 x 19 x 22 cm
Packaging size (L x W x h)	102 x 23 x 37 cm
Cleaner weight	3,2 kg
Packaging weight	9,5 kg
Filtering capacity	Pool filtering circuit
Cleaned width	36cm
Displacement speed	8 m/min
Minimum required filter pump power	3/4 HP (1 HP forTile pools)

SPARE PARTS Spare parts p.234

OPTIONAL ACCESSORIES (NOT INCLUDED)

	6 section of 1m Twist Lock hoses	Cyclonic™ Leaf Catcher
Reference	W78055	W37110

9 317545 021911

Cyclonic™ Leaf Catcher

2 YEAR WARRANTY

+ Cyclone suction system: constant suction and dirt remains in suspension
+ no pressure on the pump
+ Large, transparent, easy-to-empty filter basket
+ Fits all hose types

PRODUCT REFERENCE

W37110

ACCESSORIES INCLUDED IN THE PACK

Standard hose and Twist Lock hose adaptors

DESCRIPTION

Installation	Suction line or skimmer
Types of debris handled	All debris

TECHNICAL SPECIFICATIONS

Cleaner size (L x W x h)	23 x 19 x 28 cm
Packaging size (L x W x h)	24 x 20 x 29 cm
Cleaner weight	1 kg
Packaging weight	1,3 kg

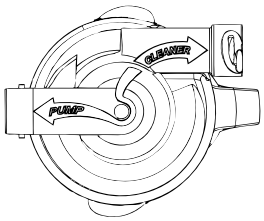

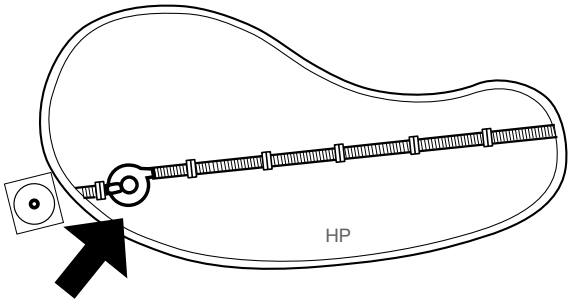

Install at the first hose connection closest to skimmer/or suction line.
Ensure correct orientation using guides (Pump/Cleaner) on Leaf Catcher lid.

3 478580 371105

Spa Wand

Pool Cleaners > Hydraulics > Spa Wand

2 YEAR WARRANTY

+ Targeted cleaning of small volumes : spa, steps…
+ Efficient and easy to use handheld brush and no connection required
+ Debris are collected in a separate stainless steel filter

ALL TYPES OF SWIMMING POOLS

ALL TYPE OF LININGS

PRODUCT REFERENCE

W9320018

ACCESSORIES INCLUDED IN THE PACK

Steel filter	2 sweeping nozzles	Wall bracket

FOR WHICH TYPE OF POOLS?

Types of pools	Private above ground and above-ground pools with rigid walls, spas, steps, overflow gutters, integrated filtering blocks
Pool shapes	Rectangular, oval, free shape
All Floors	Flat, gentle slope, composite slope
Pool surfaces	Tiles, liner, polyester hull, reinforced PVC, painted concrete

DESCRIPTION

Power supply	Manual brush
Installation	Suction line or skimmer
Types of debris handled	Dust, insects, gravel, leaves, …

TECHNICAL SPECIFICATIONS

Cleaner size (L x W x h)	7 x 7 x 144 cm
Packaging size (L x W x h)	8 x 9 x 146 cm
Cleaner weight	1,2 kg
Packaging weight	1,7 kg

SPARE PARTS Spare parts p.236

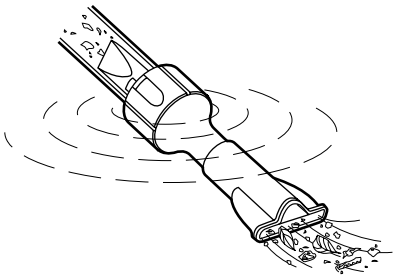

Wide sweeping nozzle: specially designed for surface floating debris or suspended debris.

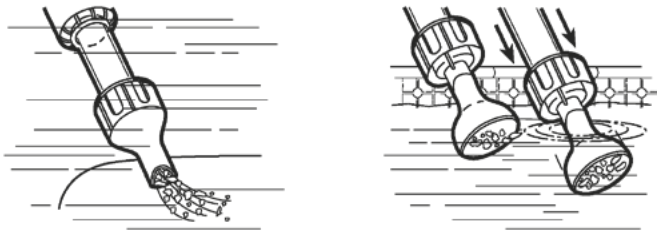

Double function nozzle: specially designed for debris at the bottom and corners.

7 389190 134690

Polaris®

INTRODUCTION	**P.44**
• Polaris® QUATTRO™ Sport	p.46
• Polaris® 280	p.47
• Polaris® 3900 Sport	p.48
• Polaris® TailSweep Pro	p.49
• Booster Pump & Control box	p.50

> Polaris®

The high pressure cleaner

The cleaner sucks in debris using a physical principle called **'Venturi effect',** which is produced inside the machine and **converts the incoming water into a powerful suction current.**

This characteristic provides maximum efficiency in the minimum time.

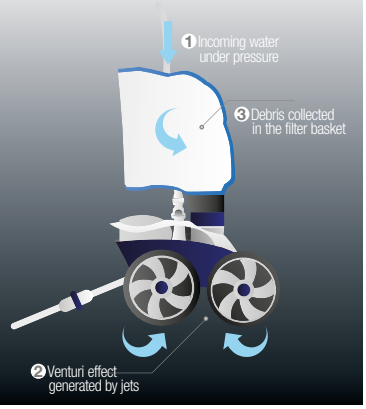

EQUIPMENT NEEDED

- The pipes of the vacuum point must be made of RIGID 16 bar PVC and not flexible material
- Booster, minimum 1 HP coupled to filtration

For optimum operation, advise your customers to equip their pools with an electrical programming box and a Polaris® booster. This guarantees complete compatibility and ideal suction power.

- Minimum operating pressure 1.8 bar

STANDARD INSTALLATION

1. Water is sucked by the pump through the skimmers and the floor drain.
2. The water is sent to the filter to be cleaned.
3. The water is returned clean to the swimming pool through the return discharges.
4. A detour is created on this pipework to feed the booster.
5. Polaris® pressure cleaners are connected to the vacuum point converted into return discharge.
6. The Venturi effect generated by the jets converts the incoming water into a powerful suction current and enables the cleaner to move.
7. The length of the pipe must be equal to the distance between the return pipe (5) and the furthest point (7).

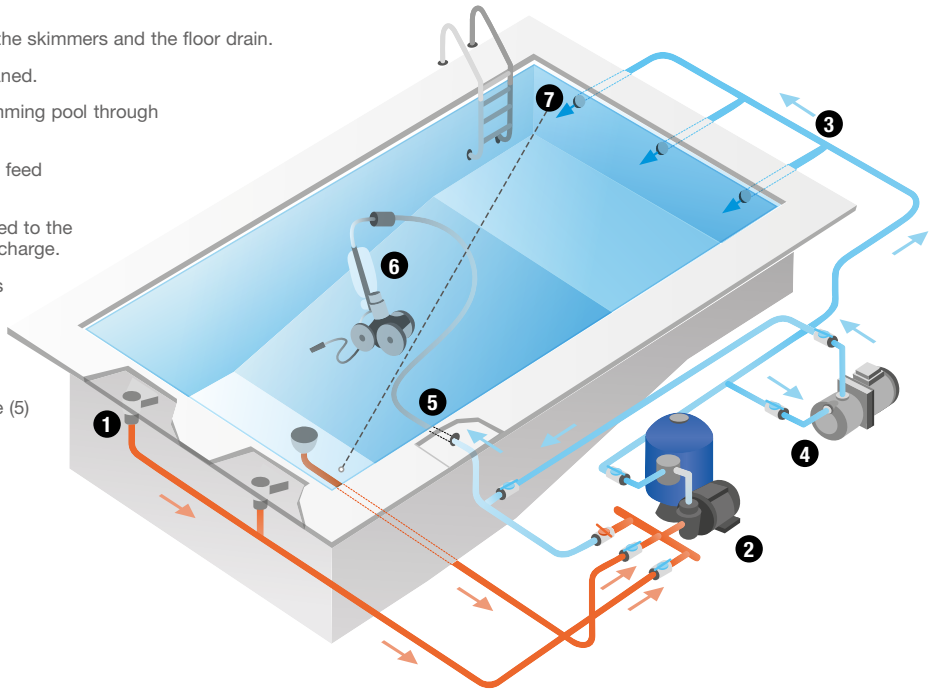

INSTALLATION OF THE PIPE

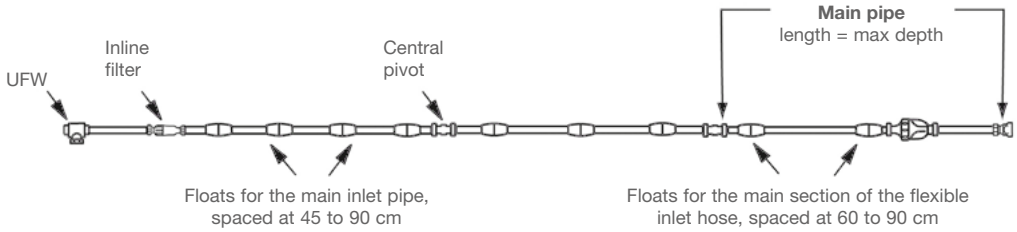

Polaris® QUATTRO™ SPORT

> Debris doesn't stand a chance

Large capacity and easy-clean debris canister

Can easily be removed and cleaned without touching the debris with a simple jet of water.

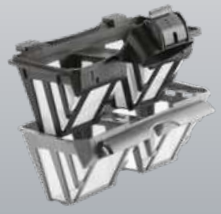

Double filtration

Collects both large and fine debris.

Active brushing

Removes debris, even stuck-on debris.

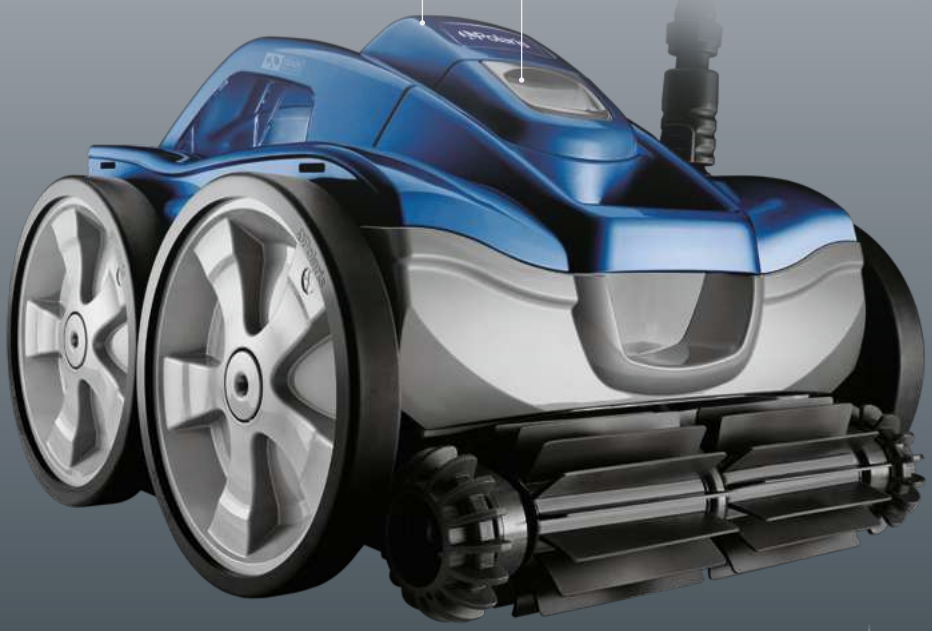

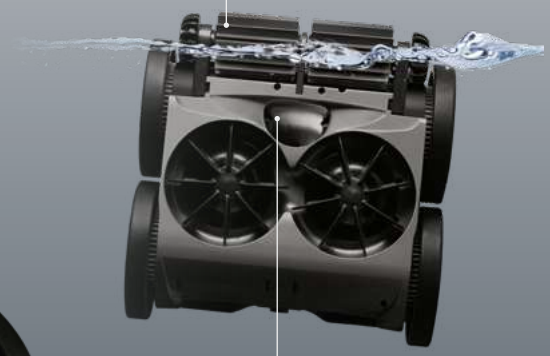

Extra-large debris intake & superior vacuum power

Easily sucks up all types of debris, even the largest.

Monte aux parois

Ses 4 roues motrices lui confèrent une grande agilité pour nettoyer le fond mais aussi les parois.

Multi-directional navigation

Delivers quick and efficient coverage of the entire pool.

Powered with a booster bump

Polaris® QUATTRO™

Polaris® > Pressure cleaner > Polaris® QUATTRO™ Sport

+ 3 jets, ultra-powerful suction
+ Large debris intake
+ Multi-directional navigation
+ Dual-stage filtration

2 YEAR WARRANTY

ALL TYPES OF SWIMMING POOLS

PRODUCT REFERENCE

WE000028

ACCESSORIES INCLUDED IN THE PACK

Dual stage filter canister 3.5L

FOR WHICH TYPE OF POOLS:

Types of pool	Private in-ground pools
Pool shapes	All shapes
Bottoms	Flat bottom, gentle slope, composed slope, diving pit, diamond point
Surfaces	Tiles*, liner, polyester hull, reinforced PVC, painted concrete

DESCRIPTION

System type	Pressure cleaner
Steering	Random and multi-directional
Power supply	Booster pump coupled to filtering
Suction	3 jets Venturi system
Debris collection	Rigid dual canister / Access over the cleaner

TECHNICAL SPECIFICATIONS

Required equipment*	1 HP booster pump, 1.5 HP booster pump and greater **
Operating pressure	2,2 bars
Specific brush socket line	Fixed hose 16 bars
Speed	16 m / min
Suction size	7 cm
Hose length	9,60 m
Weight	6.8 kg
Units / pallet	20

SPARE PARTS Spare pieces p.238

ACCESSOIRES DISPONIBLES EN OPTION

	All-purpose filter canister	Fine filter canister	PosiTrax tyre for tiled pool
Réf. Polaris	-	-	C14
Réf. Zodiac	R0836300	R0836400	W7230256

* For perfect grip of your cleaner on tiles, replace the original tracks with Positrax tires sold as accessories
** For a technical room at a distance of more than 15 m. For a perfect use of your pressure cleaner, we recommend to use it with a 1.5 HP

ZPCE: recommended sales price valid from 01/01/2019020

Polaris® 280

Polaris > Pressure cleaner > Polaris® 280

+ 2 jets, ultra-powerful suction
+ Wide suction aperture
+ Automatic back-up valve, anti-jamming.

2 YEAR WARRANTY

ALL TYPES OF SWIMMING POOLS

PRODUCT REFERENCE

W7220000

ACCESSORIES INCLUDED IN THE PACK

standard sand/silt bag	Back-up valve

FOR WHICH TYPE OF POOLS:

Types of pool	Private in-ground pools
Pool shapes	All shapes
Bottoms	Flat bottom, gentle slope, composed slope, diving pit, diamond point
Surfaces	Liner

DESCRIPTION

System type	Pressure cleaner
Steering	Random and automatic reverse
Power supply	Booster pump coupled to filtering
Suction	2 jets Venturi system
Debris collection	Filter bag + sweep hose scrubber

TECHNICAL SPECIFICATIONS

Required equipment*	1 HP booster pump
Operating pressure	2,2 bars
Specific brush socket line	Fixed hose 16 bars
Speed	15 m / min
Suction size	7 cm
Hose length	9,60 m
Weight	3,2 kg
Units / pallet	36

SPARE PARTS Spare pieces p.242

OPTIONAL ACCESSORIES (NOT INCLUDED)

				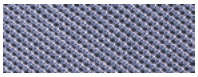
	Disposable bags (EZ Bag) (packs of 6)	Standard silt bag	Leaf bag	Ultra fine bag
Ref. Polaris	K-52	K-13	K-15	K-14
Ref. Zodiac	W7230114	W7230102	W7230104	W7230103

*Depending on the distance to the technical room

73891900370

Polaris® 3900 SPORT

Polaris > Pressure cleaner > Polaris® 3900 Sport

2 YEAR WARRANTY

- 3 jets, ultra-powerful suction
- 3 wheel drive fitted with wide tyres
- Automatic back-up valve, anti-jamming
- Stainless steel chain, highly reliable gear system.

ALL TYPES OF SWIMMING POOLS

PRODUCT REFERENCE

W7620000

ACCESSORIES INCLUDED IN THE PACK

Double capacity filter bag	Ultra-fine filter bag	Back-up valve	Tail Sweep Pro

FOR WHICH TYPE OF POOLS:

Types of pool	Private in-ground pools
Pool shapes	All shapes
Bottoms	Flat bottom, gentle slope, composed slope, diving pit, diamond point
Surfaces	Liner

DESCRIPTION

System type	Pressure cleaner
Steering	Random and automatic reverse
Power supply	Booster pump coupled to filtering
Suction	3 jets Venturi system
Debris collection	Filter bag + sweep hose scrubber

TECHNICAL SPECIFICATIONS

Required equipment*	1 HP booster pump, 1.5 HP booster pump and greater **
Operating pressure	2,2 à 2,6 bars max
Specific brush socket line	Fixed hose 16 bars
Speed	20 m / min
Suction size	6 cm
Hose length	9,60 m
Weight	3,5 kg
Units / pallet	16

SPARE PARTS Spare pieces p.240

OPTIONAL ACCESSORIES (NOT INCLUDED)

					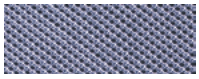
	Disposable bags (EZ Bag) (packs of 6)	Standard, double capacity silt bag	Standard silt bag	Leaf bag	Ultra fine bag
Ref. Polaris	K-52	39-310	K-23	K-15	K-18
Ref. Zodiac	W7230114	W7610000	W7230111	W7230104	W7230109

*Depending on the distance to the technical room
**For a technical room at a distance of more than 15 m. For a perfect use of your pressure cleaner, we recommend to use it with a 1.5 HP booster pump and greater

ZPCE: recommended sales price valid from 01/01/2019020

73891906426

Polaris® TailSweep PRO®

Polaris > Pressure cleaner > Tail Sweep pro

- Optimized removal of debris in the pool
- Reduced water spraying around the pool
- Easy to install at the end of the flexible hose of Polaris® robot cleaners
- Suitable for all models of Polaris® pressure cleaners

2 YEAR WARRANTY

ALL TYPES OF SWIMMING POOLS

	18 units Display	Case of 12 units
PRODUCT REFERENCE		
Standard model	W7220031	W7220032

ACCESSORIES INCLUDED IN THE PACK

Foam brush	Tail sweep

TECHNICAL SPECIFICATIONS

Dimensions of the accessory (L x D x h)	10 x 5 x 5 cm
Packaging dimensions (L x D x h)	11 x 5 x 5 cm
Weight of the accessory	21 g
Packaged weight	39 g

GENERAL SPECIFICATIONS

Installation	By the user, on the end of the flexible hose of the pressure cleaner

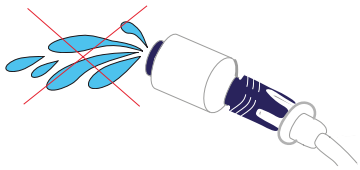

Side inlets for water suction or air suction

Diffuser for water dispersion

In the water :
The Trail Sweep Pro® side inlets are used to suck in the water which is re-injected by Venturi effect into the diffuser :
- Increased flow rate
- Optimised removal of debris

Out of the water :
As soon as these inlets emerge from the water, the air which is sucked in cuts the injection of water to avoid water being sprayed outside the pool.

52337060325
12

52337060592
18

Booster Pump & Control box

+ All water treatment adapted (sea water, chlorine water, demineralized water...)
+ Distance from the pool up to 20 meters
+ Connection kit “Quick Connect” includ in the BPK pack

ALL TYPES OF SWIMMING POOLS

	Booster pump without connexion kit	Booster pump with connexion kit
PRODUCT REFERENCE		
Standard model	BP / W4530247	BPK / W4530248

GENERAL	
Power	1 CV single phase
Type	Multicellular
Body and turbine	Noryl®
Composition	Pump + Kit Quick Connect (BPK)
Weight	11 kg
Guarantee	2 ans

TECHNICAL SPECIFICATIONS	
Supply voltage	220-240 V
Consumption	0,75 kW
Turbine shaft	Inox AISI 420
RPM	2800 rpm
Bust of AMP	5,3 A
Protection index	Watertightness IP-55

+ Ideal to be combined with Polaris Cleaners
+ Easy to program
+ Magnetic-thermal breaker to protect the system

	Electric box
PRODUCT REFERENCE	
Standard model	CE-2001 / W2520001

GENERAL	
Size	L. 220 x l. 200 x H. 200 mm
Weight	1 kg
Guarantee	2 ans

TECHNICAL SPECIFICATIONS	
Electrical supply	1 ph 230 V / 50 Hz
Circuit breaker	4 to 6,3 A
Switch main power	Auto / stop / manual
Protection index	Watertightness IP-65
Installation	30 mA

SPARE PARTS Spare pieces p.246

ZPCE: recommended sales price valid from 01/01/2019020

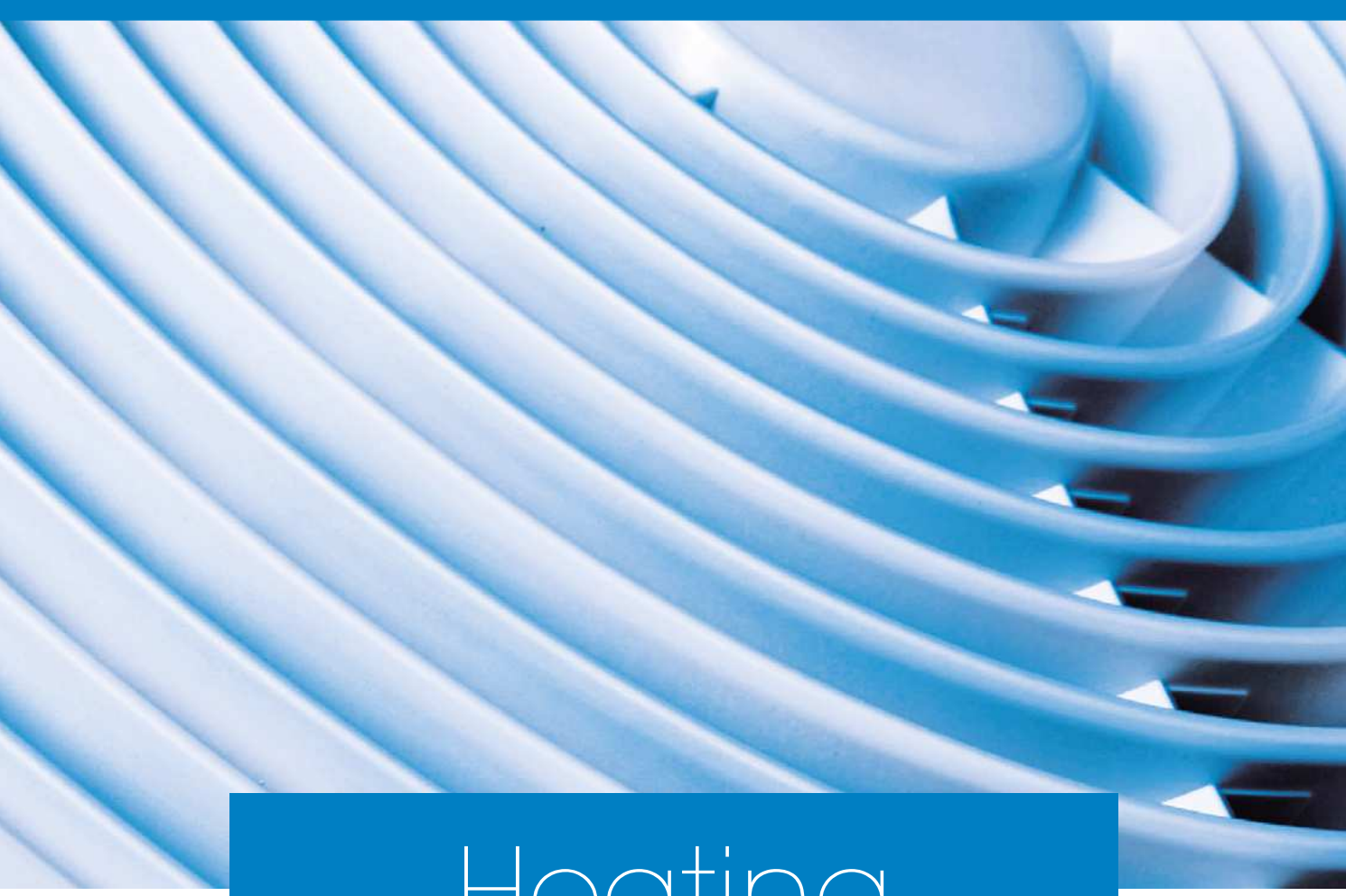

Heating

INTRODUCTION **P.52**

HEAT PUMPS **P.58**

- Z200 p.60
- Z200 defrost p.62
- Z300 p.64
- Z400iQ p.66
- Z400iQ Stainless p.68
- ZS500 p.70
- Z500iQ p.72
- Z600 Silent p.74
- Z700 Duo p.76
- Power Force p.78
- Z900 p.80

ELECTRIC HEATERS **P.82**

- RE/L p.83
- RED LINE p.84
- RE/U p.85
- RE/I p.86

EXCHANGERS **P.87**

- Heat Line - Unequipped, Plus without circulating pump & with circulating pump p.88
- Uranus + Unequipped and Plus p.90

> SWIMMING POOL HEATING SOLUTIONS

Equipping a pool with a heating solution means freedom from the vagaries of the weather and extending its use period.
Heat pumps, electric heaters, heat exchangers - the Zodiac® product range allows everyone to enjoy water at a constant ideal temperature under all circumstances.

> PARAMETERS FOR CHOOSING A HEATING SYSTEM

To define a system suitable for a pool, you need to know its **volume (in m³), the desired use period** and estimate the **temperature (in °C)** the water in the pool should reach.

These simple parameters will enable you to size the heating system correctly and will guarantee you **maximum comfort at a lower cost.**

The choice of heating equipment also depends on the energy source that will be used.

COMPARATIVE TABLE OF RANGES

	Heat pumps	Electric heaters	Heat exchangers
Solution	Stand-alone, dedicated to the pool	Stand-alone, dedicated to the pool	Coupled to the domestic heating
Energy used	Renewable	Electricity	Domestic heating source (gas, oil, electricity, renewable, etc.)
Running cost	€	€€€	€ to €€€
Investment	€€	€	€
Advantages	Economical Efficient	Simple installation Rapid temperature increase	Rapid temperature increase (if gas/oil boiler) Compatible with all heating systems
Uses	All open air or indoor pools	Spas and pools used at weekends or holiday homes	Indoor and outdoor pools close to the boiler in the house

> HEAT PUMPS
The economical and ecological solution

Affordable and easy to install, heat pumps are the ideal solution for heating the pool while also saving energy.

> HOW DOES IT WORK?

The heat pump is a **thermodynamic system.** Its operating principle is very simple:
the system takes calories from the air and transfers them directly to the water in the pool.

80% of the energy comes from the air.
20% of the energy comes from your electricity supplier.

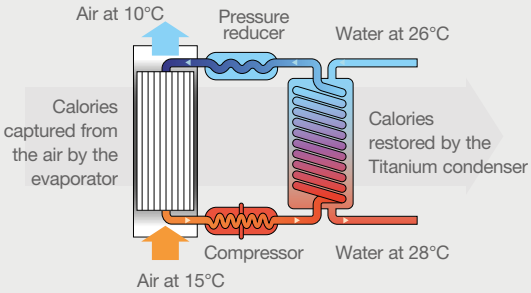

The heat pump recovers calories from the outside air.
The heat pump restores calories to the water in the pool by thermodynamic exchange.

Find the video
by scanning the QR code below:

or by visiting our YouTube channel:
http://youtu.be/-5UAXBFInX8

Heat pumps can be installed easily on pools under construction and on existing pools, by a simple electrical or hydraulic connection.

> WHAT TYPE OF DEFROSTING?

When the outside temperature is low, the evaporator will tend to ice up, which reduces its efficiency: this ice must therefore be removed.
There are 2 types of defrosting:

- **Defrosting by ventilation or economical defrosting**
  The cooling circuit is stopped for a few minutes. Only the fan operates, forcing outside air to defrost naturally.
  This type of defrosting is suitable and adequate for all open air pools (seasonal use).
- **Defrosting by cycle inversion or intensive defrosting**
  The cooling circuit is reversed: heat from the water in the pool is taken to defrost the evaporator. This allows operation at temperatures down to -12°C.
  This type of defrosting is essential for indoor or covered pools operating throughout the year.

> A SIZING SERVICE AVAILABLE TO HELP YOU

Benefit from **the support of the Zodiac®** design office or size Zodiac® systems yourself on the Internet using the **'BilPi' software**.
To find out more, see the 'Services' section in the introduction to this catalogue.

SERVICES +

REFERENCE POINT
Zodiac® offers service solutions to help you.
Find these services in this catalogue using this pictogram.

> HOW IS THE PERFORMANCE OF HEAT PUMPS COMPARED?

To compare the performance of different heat pumps, it is essential to compare power supplied and performance coefficient under the same temperature and humidity conditions.

Two main values characterise the performance of heat pumps: their power and their performance coefficient.

- **Power, expressed in kW**, indicates the quantity of heat transferred to the water.

It varies depending on three conditions to which the heat pump is exposed during use: temperature of the outside air, humidity of the outside air and temperature of the water in the pool.

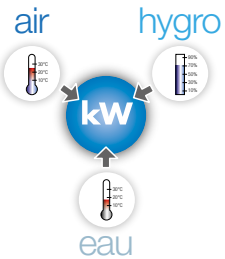

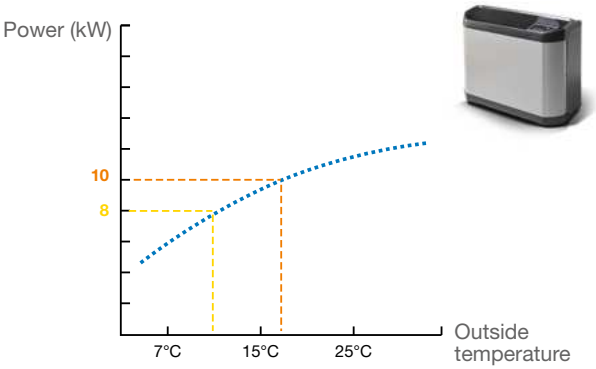

- The **coefficient of performance (COP)** is the ratio between the power supplied to the water in the pool and the power consumption of the heat pump.

As an example, a performance coefficient of 4 means that for 1 kWh consumed at the electricity meter, the heat supplies 4 times more energy to the water in the pool, or 4 kWh.

So the higher the performance coefficient, the more efficient and economical the system.

Like power, the performance coefficient depends directly on the conditions of use.

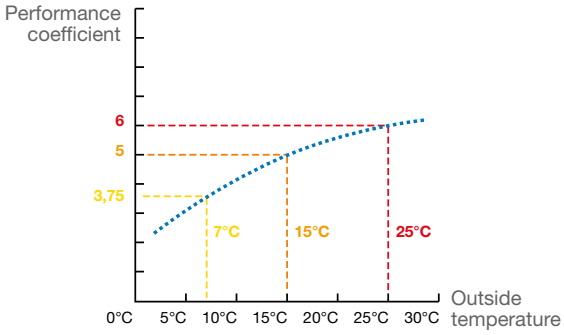

> ZODIAC® HEAT PUMPS: NF-CERTIFIED HEAT PUMPS

NF-certification for swimming pool heat pumps means:

- Certified performance (power returned, performance coefficient, noise level) measured in an accredited laboratory by a certification body.
- An annual performance test of products and information given in the catalogue.
- Certification of the manufacturer and annual audit to maintain this certification.
- Service guarantee to customers: appropriate after-sales service organisation, spare parts available for 10 years, etc.

A true measure of performance, quality and service commitment for its customers and the end consumer!

REFERENCE POINT
The NF mark is very well-known by the public: 90% of French people know it and identify it as a sign of quality.

Zodiac® is the first manufacturer to offer NF-certified swimming pool heat pumps.

> HEAT PUMPS
A silent installation

> MEASURING NOISE LEVEL ACCURATELY

The latest technologies used in the design of evaporators, fans and compressors make Zodiac® heat pumps extremely quiet.

The noise level should be measured by a certified body to obtain a real and objective value. It is expressed:

- Either **as acoustic power dB(A):** this is the unmodified noise level of the emitting source.
- Or **as acoustic pressure dB(A):** this is the sound level perceived by the human ear. It depends on the installation environment and distance at which the measurement is made. It must therefore always include a measuring distance.

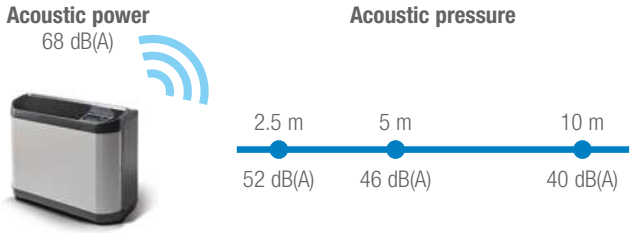

The further you are from the emitting source, the more the sound level falls: it is reduced by 6 dB(A) for every doubling of the distance.

NOISE SCALE

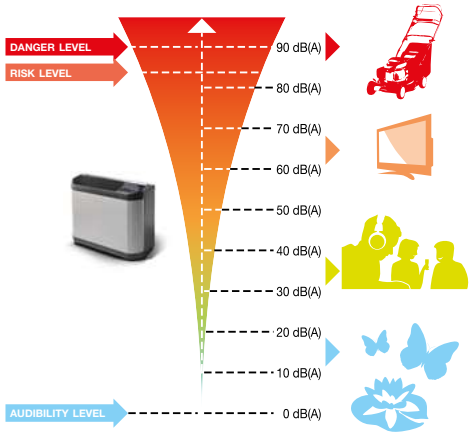

To compare the noise level of several machines, check what type of value you have, power or pressure, and if it is pressure then at what distance was it measured!

> RECOMMENDATIONS FOR INSTALLING A SWIMMING POOL HEAT PUMP

A heat pump system includes 'moving' parts (compressor, fan, etc.), vibrations from which can spread and build up.

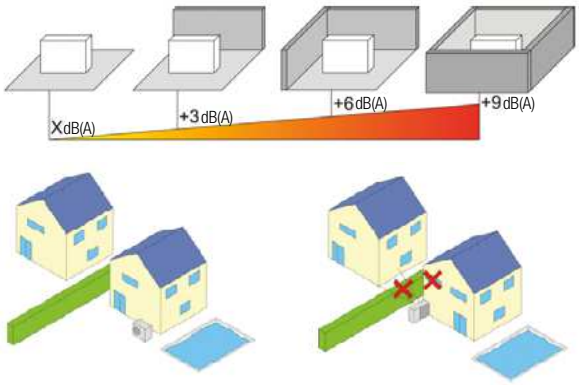

To avoid or reduce disturbances, a few installation rules should be followed:

- **Favour open spaces** (avoid corners or interior courtyards), because sound waves coming from all sides of the system are reflected by the surfaces facing them.
- **Do not install the system below or facing a window.**
- **Relative to neighbouring properties:**
  - Install the system as far as possible from property boundaries.
  - The fan should not point towards neighbouring properties.

> REDUCE TRANSMISSION OF VIBRATIONS THROUGH THE BASE

- Fit suitable anti-vibration blocks.
- Renew them if necessary to absorb vibrations, because they lose effectiveness over time.
- Install a mounting base. It should weigh at least twice as much as the heat pump. It must be independent of a building.

Anti-vibration blocks
(ref : WAP3064)

Mounting base

> ACOUSTIC POWER / PRESSURE MATCHING TABLE

FREE STANDING UNIT, HORIZONTAL PLANE, 360° FREE AREA

How to read: for an acoustic power of 60dB(A), the acoustic pressure at 7m of a unit installed on horizontal plane, 360° free area, is 35,1dB(A)

Acoustic power (dB(A))	Acoustic Pressure at n metres (dB(A)) (free standing unit, horizontal plane, 360° free area)									
	1m	2m	3m	4m	5m	6m	7m	8m	9m	10m
20	12,0	6,0	2,5							
21	13,0	7,0	3,5	1,0						
22	14,0	8,0	4,5	2,0	0,0					
23	15,0	9,0	5,5	3,0	1,0					
24	16,0	10,0	6,5	4,0	2,0	0,5				
25	17,0	11,0	7,5	5,0	3,0	1,5	0,1			
26	18,0	12,0	8,5	6,0	4,0	2,5	1,1			
27	19,0	13,0	9,5	7,0	5,0	3,5	2,1	1,0		
28	20,0	14,0	10,5	8,0	6,0	4,5	3,1	2,0	0,9	0,0
29	21,0	15,0	11,5	9,0	7,0	5,5	4,1	3,0	1,9	1,0
30	22,0	16,0	12,5	10,0	8,0	6,5	5,1	4,0	2,9	2,0
31	23,0	17,0	13,5	11,0	9,0	7,5	6,1	5,0	3,9	3,0
32	24,0	18,0	14,5	12,0	10,0	8,5	7,1	6,0	4,9	4,0
33	25,0	19,0	15,5	13,0	11,0	9,5	8,1	7,0	5,9	5,0
34	26,0	20,0	16,5	14,0	12,0	10,5	9,1	8,0	6,9	6,0
35	27,0	21,0	17,5	15,0	13,0	11,5	10,1	9,0	7,9	7,0
36	28,0	22,0	18,5	16,0	14,0	12,5	11,1	10,0	8,9	8,0
37	29,0	23,0	19,5	17,0	15,0	13,5	12,1	11,0	9,9	9,0
38	30,0	24,0	20,5	18,0	16,0	14,5	13,1	12,0	10,9	10,0
39	31,0	25,0	21,5	19,0	17,0	15,5	14,1	13,0	11,9	11,0
40	32,0	26,0	22,5	20,0	18,0	16,5	15,1	14,0	12,9	12,0
41	33,0	27,0	23,5	21,0	19,0	17,5	16,1	15,0	13,9	13,0
42	34,0	28,0	24,5	22,0	20,0	18,5	17,1	16,0	14,9	14,0
43	35,0	29,0	25,5	23,0	21,0	19,5	18,1	17,0	15,9	15,0
44	36,0	30,0	26,5	24,0	22,0	20,5	19,1	18,0	16,9	16,0
45	37,0	31,0	27,5	25,0	23,0	21,5	20,1	19,0	17,9	17,0
46	38,0	32,0	28,5	26,0	24,0	22,5	21,1	20,0	18,9	18,0
47	39,0	33,0	29,5	27,0	25,0	23,5	22,1	21,0	19,9	19,0
48	40,0	34,0	30,5	28,0	26,0	24,5	23,1	22,0	20,9	20,0
49	41,0	35,0	31,5	29,0	27,0	25,5	24,1	23,0	21,9	21,0
50	42,0	36,0	32,5	30,0	28,0	26,5	25,1	24,0	22,9	22,0
51	43,0	37,0	33,5	31,0	29,0	27,5	26,1	25,0	23,9	23,0
52	44,0	38,0	34,5	32,0	30,0	28,5	27,1	26,0	24,9	24,0
53	45,0	39,0	35,5	33,0	31,0	29,5	28,1	27,0	25,9	25,0
54	46,0	40,0	36,5	34,0	32,0	30,5	29,1	28,0	26,9	26,0
55	47,0	41,0	37,5	35,0	33,0	31,5	30,1	29,0	27,9	27,0
56	48,0	42,0	38,5	36,0	34,0	32,5	31,1	30,0	28,9	28,0
57	49,0	43,0	39,5	37,0	35,0	33,5	32,1	31,0	29,9	29,0
58	50,0	44,0	40,5	38,0	36,0	34,5	33,1	32,0	30,9	30,0
59	51,0	45,0	41,5	39,0	37,0	35,5	34,1	33,0	31,9	31,0
60	52,0	46,0	42,5	40,0	38,0	36,5	35,1	34,0	32,9	32,0
61	53,0	47,0	43,5	41,0	39,0	37,5	36,1	35,0	33,9	33,0
62	54,0	48,0	44,5	42,0	40,0	38,5	37,1	36,0	34,9	34,0
63	55,0	49,0	45,5	43,0	41,0	39,5	38,1	37,0	35,9	35,0
64	56,0	50,0	46,5	44,0	42,0	40,5	39,1	38,0	36,9	36,0
65	57,0	51,0	47,5	45,0	43,0	41,5	40,1	39,0	37,9	37,0
66	58,0	52,0	48,5	46,0	44,0	42,5	41,1	40,0	38,9	38,0
67	59,0	53,0	49,5	47,0	45,0	43,5	42,1	41,0	39,9	39,0
68	60,0	54,0	50,5	48,0	46,0	44,5	43,1	42,0	40,9	40,0
69	61,0	55,0	51,5	49,0	47,0	45,5	44,1	43,0	41,9	41,0
70	62,0	56,0	52,5	50,0	48,0	46,5	45,1	44,0	42,9	42,0
71	63,0	57,0	53,5	51,0	49,0	47,5	46,1	45,0	43,9	43,0
72	64,0	58,0	54,5	52,0	50,0	48,5	47,1	46,0	44,9	44,0
73	65,0	59,0	55,5	53,0	51,0	49,5	48,1	47,0	45,9	45,0
74	66,0	60,0	56,5	54,0	52,0	50,5	49,1	48,0	46,9	46,0
75	67,0	61,0	57,5	55,0	53,0	51,5	50,1	49,0	47,9	47,0
76	68,0	62,0	58,5	56,0	54,0	52,5	51,1	50,0	48,9	48,0
77	69,0	63,0	59,5	57,0	55,0	53,5	52,1	51,0	49,9	49,0
78	70,0	64,0	60,5	58,0	56,0	54,5	53,1	52,0	50,9	50,0
79	71,0	65,0	61,5	59,0	57,0	55,5	54,1	53,0	51,9	51,0
80	72,0	66,0	62,5	60,0	58,0	56,5	55,1	54,0	52,9	52,0

> Z500iQ
THE ECO-SILENCE CHOICE

INVERTER TECHNOLOGY: SILENT AND ECONOMICAL

Z500iQ comes equipped with the Heatselect Technology. Operating speed is adjusted based on the required power and selected mode :

- Boost: maximum power for fast heat-up
- Smart: automatic power adjustment depending on temperature
- Ecosilence: further energy savings and lowest noise level

FITS EASILY INTO SMALL PLACES

The Z500iQ is discreet and can be installed next to any pool. Thanks to its smaller footprint, requiring half the space of standard heat pumps and to its vertical air flow, it can be placed in the smallest spaces.

EMBEDDED CONNECTIVITY

With your smartphone, you can remotely set and consult Z500iQ heat pump's different modes of operation. Z500iQ is upgradeable thanks to possible optimisations and automatic remote updates.

Colour to be confirmed

Intuitive Navigation

New display positionned on the top front, to maximize comfort of use.

User-friendly navigation with one-touch access to main functions.

Mode gauge

Luminous gauge helps to visualize the status and heating mode from a far (heating / cooling / error).

Wi-Fi Control through iAquaLink™

- iAqualink App[1] to control the unit remotely
- Temperature setting (heating / cooling)
- Mode selection (cooling mode activation, heat select : Boost / Smart / Ecosilence)
- On /Off switch
- Contextual help
- Remote firmware upgrades

iAquaLink CONTROL

[1] iAquaLink™ app availability during the 2020 pool season

HEAT PUMPS

Heat pumps offer a solution that is both **ecological** and **easy to install**, all with **highly competitive running costs**.

As thermodynamic devices, they transfer the calories (heat) present in the air to the pool water, for reduced energy consumption.

Ideal for **in-ground pools**, the Zodiac® range is available in several models to suit all types of pool.

From heat pumps for private pools to heat pumps for large public pools.

COMPARATIVE TABLE OF THE RANGE	Z200 / Z200 Defrost	Z300	Z400 iQ	Z500iQ
				Color to be comfirmed
Application	Residential	Residential	Residential	Residential
Type of pool	Open-air	Open-air or indoor	Open-air or indoor	Open-air or indoor
Maximum volume of the pool*	Up to 70 m³	Up to 110 m³	Up to 120 m³	Up to 110 m³
Advantages	Pool heating made simple	High performance and quiet - certified	Elegant and discrete	The eco-silent choice
Energy efficiency	+	++	++	+++
Acoustics	+	++	++	+++
Compact installation	++	+	++	+++
Minimum operating T°	+5 °C (standard) -5 °C (defrost)	+5 °C	- 12°C	- 12°C
Reversible operation to cool the pool			•	•
Heating priority	•	•	•	•
Can be installed in a control room**		•		•
Remote control option available	•	•	(Mobile application)	(Mobile application)

* Volumes given for information only, subject to specific characteristics of each pool, based on heat study.
** With appropriate kit.
*** NF PAC for MD4 and MD5 models

> AN ECOLOGICAL SOLUTION

From the energy in the air and using its compressor, **the heat pump supplies 4 to 5 times more power than it consumes.**

ÉCO RESPECTUEUX

DID YOU KNOW?
80% of the energy used to heat the pool comes from the outside air!

From heat pumps for private pools to heat pumps for large public pools.

COMPARATIVE TABLE OF THE RANGE	Z600 Silent	Z700 Duo	Power Force	Z900
Application	Residential to small public pool	Residential	Small to medium public pool	Medium to large public pool
Type of pool	Open-air or indoor	Indoor	Open-air or indoor	Open-air or indoor
Maximum volume of the pool*	Up to 150 m³	Up to 75 m³	Contact us	Contact us
Advantages	Made in Germany	The 2-in-1 heating solution for indoor pools	Economical and silent power	Energy efficiency and silence for public pools
Energy efficiency	+++	+++	++	++
Acoustics	+++	++	+	++
Compact size	+	+	+	++
Minimum operating T°	- 8 °C	- 8 °C	- 12°C	- 12°C
Reversible operation to cool the pool	•		•	•
Heating priority	•		•	
Can be installed in a control room**				
Remote control option available	•	•	•	•

* Volumes given for information only, subject to specific characteristics of each pool, based on heat study.
** With appropriate kit.

Z200

Heating > Heat Pumps > Z200

3 YEAR WARRANTY

5 YEAR CONDENSER WARRANTY ANTI-CORROSION

+ The most compact
+ Guaranteed heating thanks to heating priority
+ Suits most pools

SERVICES +

Ti 22 TITANE INSIDE

ECO-FRIENDLY

	Z200 M2	Z200 M3	Z200 M4	Z200 M5
PRODUCT REFERENCE				
Standard model	WH000307	WH000308	WH000309	WH000310

ACCESSORIES INCLUDED IN THE PACK

Winter cover	PVC fittings 1/2 unions Ø 40 & Ø 50	Anti-vibrations pads

EQUIPMENT

- Horizontal blowing
- Polypropylene body
- Digital display
- Heating priority mode (filtration pump control)
- Automatic defrosting (forced ventilation)
- Anti-freeze thermostat (minimum operating temperature: +5°C)
- HP & LP safety pressure switch
- Water flow switch
- Titanium water exchanger condenser
- Rotary vane compressor
- Capillary expansion valve
- Refrigerant fluid: R32

PERFORMANCE: AIR 28°C / WATER 28°C / HUMID. 80%				
Operating power (kW)	**6,7**	**9,3**	**11,5**	**14,8**
Consumed power (kW)	1,2	1,8	2,3	3,2
COP	5,5	5	5,1	4,6
PERFORMANCE: AIR 15°C / WATER 26°C / HUMID. 70%				
Operating power (kW)	4,8	7	8,1	10,1
Consumed power (kW)	1	1,6	2	2,5
COP	4,8	4,4	4	
TECHNICAL SPECIFICATIONS				
Recommended pool volume* (m^3)	< 30	< 45	< 60	< 70
Average water flow (m^3/h)	3	4	5	
Hydraulic connection	PVC 1/2union, Ø 40 or 50, glued			
Electric power supply	230 V / 1 / 50 Hz			
Nominal operating power (A)	4,5	6,3	7,9	11,2
Maximum operating power (A)	5,2	7,6	10,2	13,4
Recommended power cable size **	3 x 2.5			
Refrigerant fluid quantity (kg)	0,68	0,85	0,9	1,1
Acoustic power (dB(A))	66	67	69	72
Acoustic pressure at 10m (dB(A))	38	39	41	44

*Estimated average values for a private pool with isothermal cover, from 15 May to 15 September. For year-round / indoor pool operation, check out the Bilpi sizing tool on your pro page.
**Cable not provided. Recommended section for a maximum length of 20 meters.

DIMENSIONS (MM) AND WEIGHT

	Z200 M2	Z200 M3	Z200 M4	Z200 M5
Weight (kg)	40	45	50	53

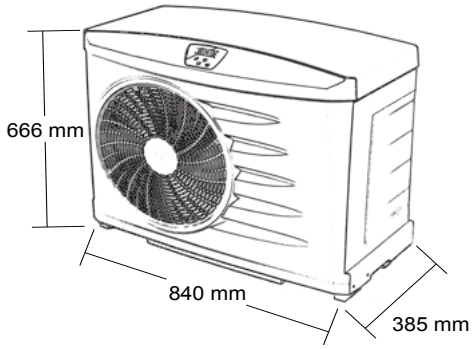

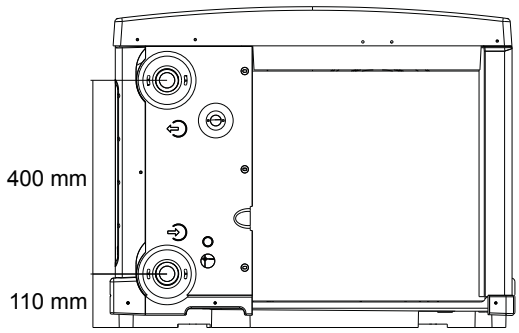

INSTALLATION

- Outside, close to the technical room, at sufficient distance from the pool (according to applicable electrical standards).
- On a stable, solid and level surface.
- Between the heat pump and its surroundings (walls, plants, etc.), maintain minimum distances as shown in the diagram below.

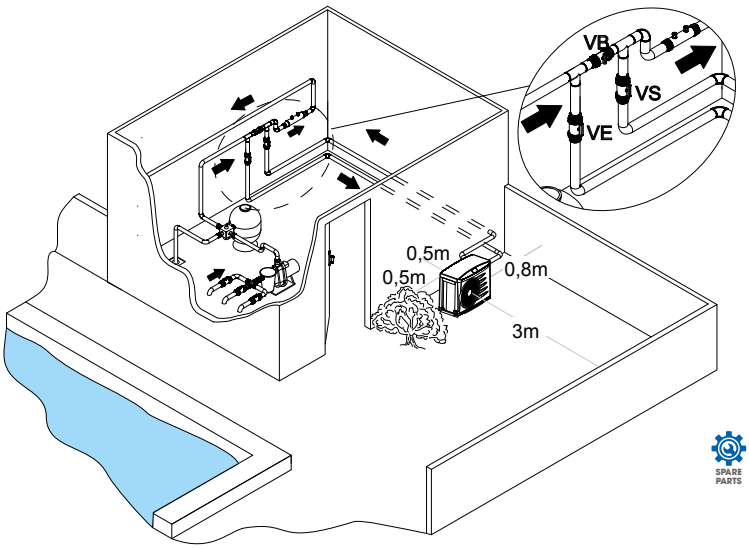

Spare parts p.248

OPTIONAL ACCESSORIES

	Winter cover	Cleaning kit HP	Remote control, Z200	Wall mounting kit, Z200
	Tailored, micro-perforated cover	Specifically formulated for evaporator cleaning. Kit includes an 5L can and a spray bottle	Transfers information and commands of the embedded interface. 20m cable included.	Includes 2 brackets and anti-vibration blocks
reference	R07094	WMA03491	WH000200	R07338

Z200 defrost

+ The most compact
+ Operating down to -5°C outdoor temperature
+ Suits most pools

SERVICES +

Ti 22 TITANE INSIDE

ECO-FRIENDLY

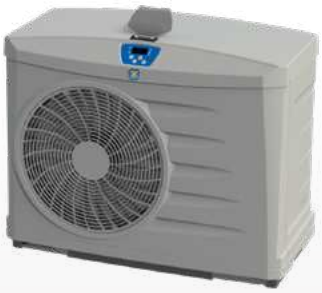

3 YEAR WARRANTY

5 YEAR CONDENSER WARRANTY ANTI-CORROSION

	Z200 MD2	Z200 MD3	Z200 MD4	Z200 MD5
PRODUCT REFERENCE				
Standard model	WH000407	WH000408	WH000409	WH000410

ACCESSORIES INCLUDED IN THE PACK

Winter cover	PVC fittings 1/2 unions Ø 40 & Ø 50	Anti-vibrations pads

EQUIPMENT

- Horizontal blowing
- Polypropylene body
- Digital display
- Heating priority mode (filtration pump control)
- Automatic defrosting (cycle inversion or forced ventilation)
- Anti-freeze thermostat (minimum operating temperature: -5°C)
- HP & LP safety pressure switch
- Water flow switch
- Titanium water exchanger condenser
- Rotary vane compressor
- Capillary expansion valve
- Refrigerant fluid: R32

PERFORMANCE: AIR 28°C / WATER 28°C / HUMID. 80%				
Operating power (kW)	**6,7**	**9,3**	**11,5**	**14,8**
Consumed power (kW)	1,2	1,8	2,3	3,2
COP	5,5	5	5,1	4,6
PERFORMANCE: AIR 15°C / WATER 26°C / HUMID. 70%				
Operating power (kW)	4,8	7	8,1	10,1
Consumed power (kW)	1	1,6	2	2,5
COP	4,8	4,4	4	

TECHNICAL SPECIFICATIONS				
Recommended pool volume* (m^3)	< 30	< 45	< 60	< 70
Average water flow (m^3/h)	3	4	5	
Hydraulic connection	PVC 1/2union, Ø 40 or 50, glued			
Electric power supply	230 V / 1 / 50 Hz			
Nominal operating power (A)	4,5	6,3	7,9	11,2
Maximum operating power (A)	5,2	7,6	10,2	13,4
Recommended power cable size **	3 x 2.5			
Refrigerant fluid quantity (kg)	0,68	0,85	0,9	1,1
Acoustic power (dB(A))	66	67	69	72
Acoustic pressure at 10m (dB(A))	38	39	41	44

*Estimated average values for a private pool with isothermal cover, from 15 May to 15 September. For year-round / indoor pool operation, check out the Bilpi sizing tool on your pro page.
**Cable not provided. Recommended section for a maximum length of 20 meters.

DIMENSIONS (MM) AND WEIGHT

	Z200 MD2	Z200 MD3	Z200 MD4	Z200 MD5
Weight (kg)	40	45	50	53

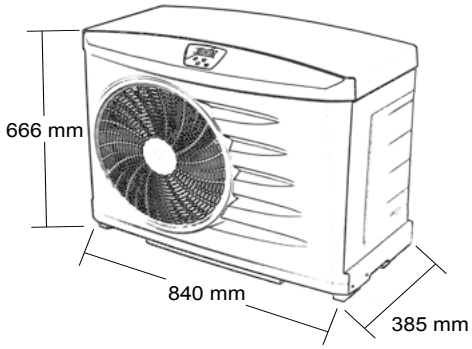

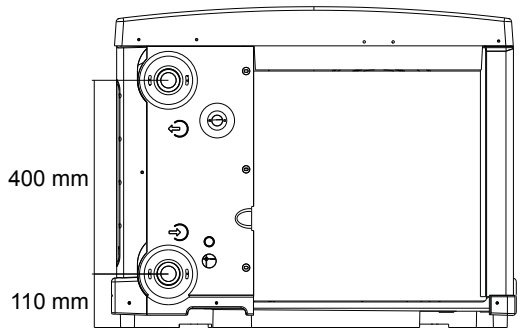

INSTALLATION

- Outside, close to the technical room, at sufficient distance from the pool (according to applicable electrical standards).
- On a stable, solid and level surface.
- Between the heat pump and its surroundings (walls, plants, etc.), maintain minimum distances as shown in the diagram below.

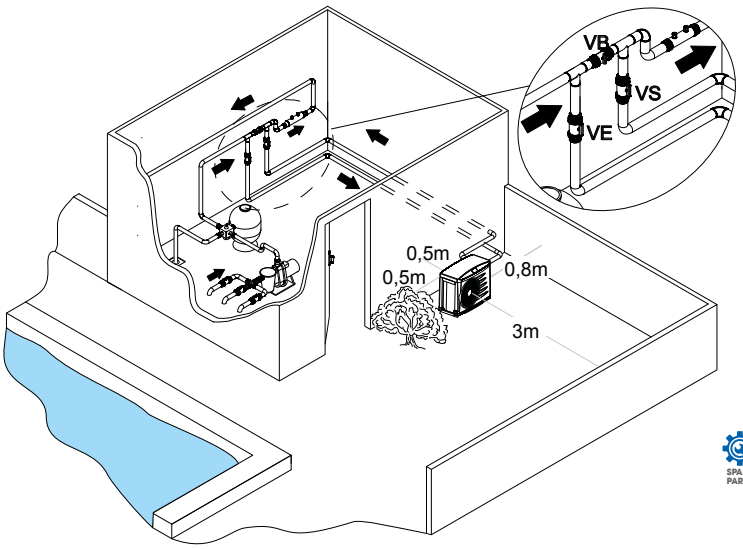

Spare parts p.248

OPTIONAL ACCESSORIES

	Winter cover	Cleaning kit HP	Remote control, Z200	Wall mounting kit, Z200
	Tailored, micro-perforated cover	Specifically formulated for evaporator cleaning. Kit includes an 5L can and a spray bottle	Transfers information and commands of the embedded interface. 20m cable included.	Includes 2 brackets and anti-vibration blocks
reference	R07094	WMA03491	WH000200	R07338

Z300

Heating > Heat Pumps > Z300

3 YEAR WARRANTY

5 YEAR CONDENSER WARRANTY ANTI-CORROSION

+ Certified performances
+ Guaranteed heating thanks to heating priority
+ Can also be installed in a technical room

NF HEAT PUMPS · SERVICES + · Ti22 TITANE INSIDE · ECO-FRIENDLY · OPTIONAL KIT TECHNICAL ROOM · MADE IN EUROPE

Within the limits of remaining stocks

	Z300 M4	Z300 M5	Z300 T5	Z300 M7
PRODUCT REFERENCE				
Standard model	WH000014	WH000015	WH000016	WH000019

ACCESSORIES INCLUDED IN THE PACK

Winter cover	PVC fittings 1/2 unions Ø 50	Anti-vibrations pads

EQUIPMENT

- Horizontal blowing
- Polypropylene body
- Digital display
- Heating priority mode (filtration pump control)
- Automatic defrosting (forced ventilation)
- Anti-freeze thermostat (minimum operating temperature: +5°C)
- HP & LP safety pressure switch
- Water flow switch
- Titanium water exchanger condenser
- Rotary vane compressor
- Electronic expansion valve
- Refrigerant fluid: R410A

PERFORMANCE: AIR 28°C / WATER 28°C / HUMID. 80%				
Operating power (kW)	**9**	**13**	**13,1**	**16,1**
Consumed power (kW)	1,6	2,4	2,3	2,9
COP	5,6	5,5	5,6	
PERFORMANCE: AIR 15°C / WATER 26°C / HUMID. 70% NF				
Operating power (kW)	7,6	10,4	10,5	13,7
Consumed power (kW)	1,70	2,20		2,90
COP	4,5	4,7		
TECHNICAL SPECIFICATIONS				
Recommended pool volume* (m^3)	< 50	< 75		< 90
Average water flow (m^3/h)	4	5		6
Hydraulic connection	PVC 1/2union, Ø 50, glued			
Electric power supply	230V / 1 / 50Hz		400V / 3 / 50Hz	230V / 1 / 50Hz
Nominal operating power (A)	7,9	10,3	4,3	13
Maximum operating power (A)	10	14,5	5,3	16,4
Recommended power cable size **	3 x 2.5		5 x 2.5	3 x 4
Refrigerant fluid quantity (kg)	0,92	1,55		1,4
Acoustic power (dB(A))	67	68	70	67
Acoustic pressure at 10m (dB(A))	39	40	42	39

*Estimated average values for a private pool with isothermal cover, from 15 May to 15 September. For year-round / indoor pool operation, check out the Bilpi sizing tool on your pro page.
**Cable not provided. Recommended section for a maximum length of 20 meters.

DIMENSIONS (MM) AND WEIGHT

	Z300 M4	Z300 M5	Z300 T5	Z300 M7
Poids (kg)	52	63	63	68

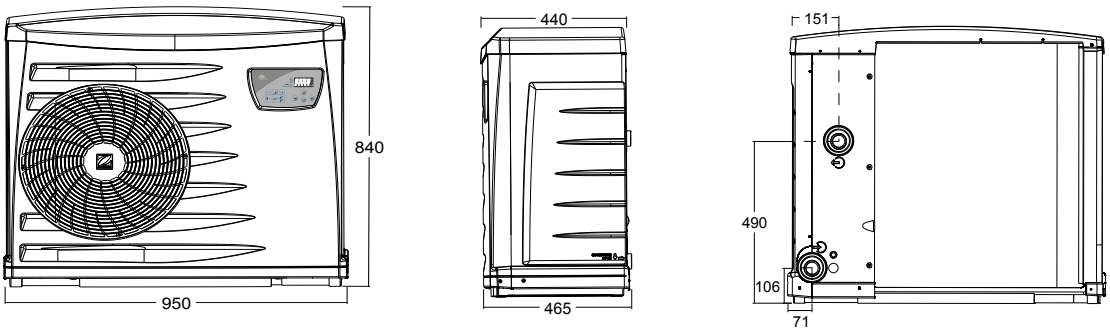

INSTALLATION

- Outside, close to the technical room, at sufficient distance from the pool (according to applicable electrical standards).
- On a stable, solid and level surface.
- Between the heat pump and its surroundings (walls, plants, etc.), maintain minimum distances as shown in the diagram below.

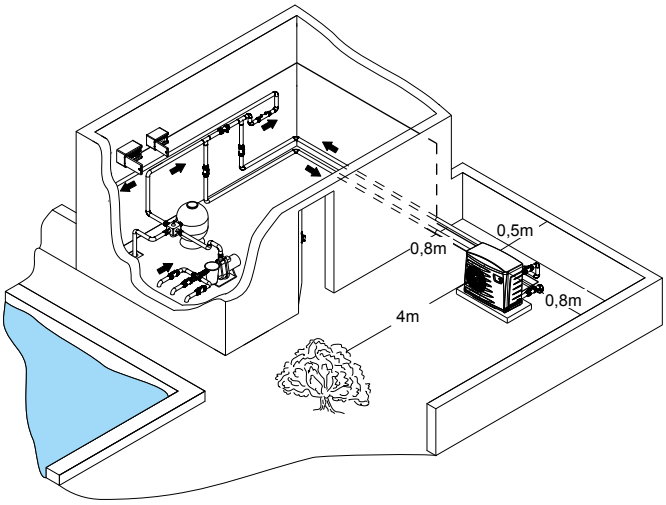

Spare parts p.250

OPTIONAL ACCESSORIES

	Winter cover	Cleaning kit HP	Remote control, Z300	Technical Room Kit	Condensate tray, Z300	Wall mounting kit, Z300
	Tailored, micro-perforated cover	Specifically formulated for evaporator cleaning. Kit includes an 5L can and a spray bottle	Transfers information and commands of the embedded interface. 20m cable included.	Includes duct, grade, frame and attachment hardware for installation in technical room.	Collects condensate beneath the heat pump. Fixed with wall mounting brackets.	Includes 2 brackets. To be combined with a condensate tray.
reference	R07095	WMA03491	WTC04004	W20KITPFPREMLT	R07242	R07339

Z400iQ

Heating > Heat Pumps > Z400iQ

+ Unique design
+ Quiet & discrete
+ Embedded connectivity

3 YEAR WARRANTY

5 YEAR CONDENSER WARRANTY ANTI-CORROSION

NF HEAT PUMPS · SERVICES + · Ti22 TITANE INSIDE · ECO-FRIENDLY · REVERSIBLE · MADE IN EUROPE · iAquaLink CONTROL

	Z400iQ MD4	Z400iQ MD5	Z400iQ MD7	Z400iQ TD7	Z400iQ MD8	Z400iQ TD8	Z400iQ MD9	Z400iQ TD9
PRODUCT REFERENCE								
Aluminium Grey (RAL 7006)	WH000348	WH000350	WH000291	WH000293	WH000295	WH000297	WH000299	WH000301
Beige Grey (RAL 9007)	WH000349	WH000351	WH000292	WH000294	WH000296	WH000298	WH000300	WH000302
NF PAC CERTIFICATION	NF	NF						

ACCESSORIES INCLUDED IN THE PACK

			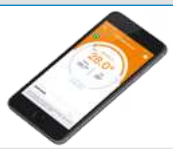
Winter cover	PVC fittings 1/2 unions Ø 50	Adjustable, anti-vibrations feet	Free app

EQUIPMENT

- Vertical air outlet
- Plastic parts in polypropylene, lateral panels in epoxy painted galvanized steel. Front panel in galvanized, pre-painted steel
- Digital display
- Heating priority mode (filtration pump control)
- 2-speed fan with Silence mode (automatic or manual)
- Automatic cooling mode
- Automatic defrosting (cycle inversion or forced ventilation)
- Anti-freeze thermostat (minimum operating temperature: -12°C)
- HP & LP safety pressure switch
- Water flow switch
- Titanium water exchanger condenser
- Rotary vane compressor
- Electronic expansion valve
- Refrigerant fluid: R410A
- Embedded Wi-Fi connectivity with dedicated app

	Z400iQ MD4	Z400iQ MD5	Z400iQ MD7	Z400iQ TD7	Z400iQ MD8	Z400iQ TD8	Z400iQ MD9	Z400iQ TD9
PERFORMANCE: AIR 28°C / WATER 28°C / HUMID. 80%								
Operating power (kW)	**8,57**	**12,10**	**15,62**		**18,65**		**22,05**	
Consumed power (kW)	1,76	2,47	3,20		3,82		4,51	
COP	4,89	4,90	4,89				4,90	
PERFORMANCE: AIR 15°C / WATER 26°C / HUMID. 70%								
Operating power (kW)	6,80	9,60	12,40		14,80		17,50	
Consumed power (kW)	1,62	2,28	2,95		3,52		4,16	
COP	4,20	4,21	4,20				4,21	
PERFORMANCE : AIR 7°C / WATER 26°C / HUMID. 70%								
Operating power (kW)	**4,70**	**7,36**	**9,26**		**11,22**		**13,76**	
Consumed power (kW)	1,38	2,16	2,72		3,30		4,05	
COP	3,41		3,40					

TECHNICAL SPECIFICATIONS

	Z400iQ MD4	Z400iQ MD5	Z400iQ MD7	Z400iQ TD7	Z400iQ MD8	Z400iQ TD8	Z400iQ MD9	Z400iQ TD9
Recommended pool volume* (m^3)	< 50	< 75	< 80		< 110		< 120	
Average water flow (m^3/h)	4	5	6		7		8	
Hydraulic connection	PVC 1/2union, Ø 50, glued							
Electric power supply	230V / 1 / 50Hz			400V / 3 / 50Hz	230V / 1 / 50Hz	400V / 3 / 50Hz	230V / 1 / 50Hz	400V / 3 / 50Hz
Nominal operating power (A)	6,9	10,2	13,4	6,7	17	6,8	19,4	8,2
Maximum operating power (A)	10	15	19	8	28	10	32	12
Recommended power cable size **	3 x 2.5			5 x 2.5	3 x 6	5 x 2.5	3 x 6	5 x 2.5
Refrigerant fluid quantity (kg)	1,2	1,3	1,45		1,8			
Acoustic Power (dB(A)) in Boost / Silent mode	64 / 61	65 / 63	66 / 63	68 / 66	64 / 61	65 / 62	64 / 62	66 / 63
Acoustic pressure at 10m (dB(A)) in Boost / Silent mode	36 / 33	37 / 35	38 / 35	40 / 38	36 / 33	37 / 34	36 / 34	38 / 35

*Estimated average values for a private pool with isothermal cover, from 15 May to 15 September. For year-round / indoor pool operation, check out the Bilpi sizing tool on your pro page.
**Cable not provided. Recommended section for a maximum length of 20 meters.

DIMENSIONS (MM) AND WEIGHT

Weight (kg)	70	71	90	94	105	105	110	110
A	1030				1145			
D	880		1027					
B	450				480			
C	479				509			

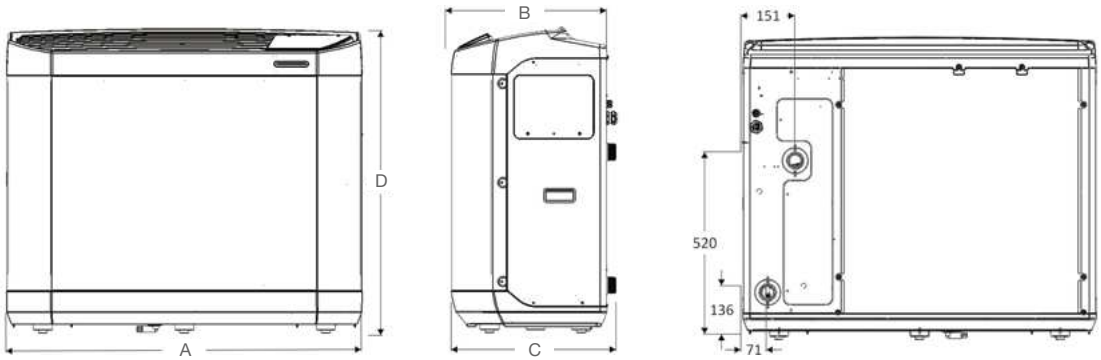

INSTALLATION

- Outside, close to the technical room, at sufficient distance from the pool (according to applicable electrical standards).
- On a stable, solid and level surface.
- Between the heat pump and its surroundings (walls, plants, etc.), maintain minimum distances as shown in the diagram below.

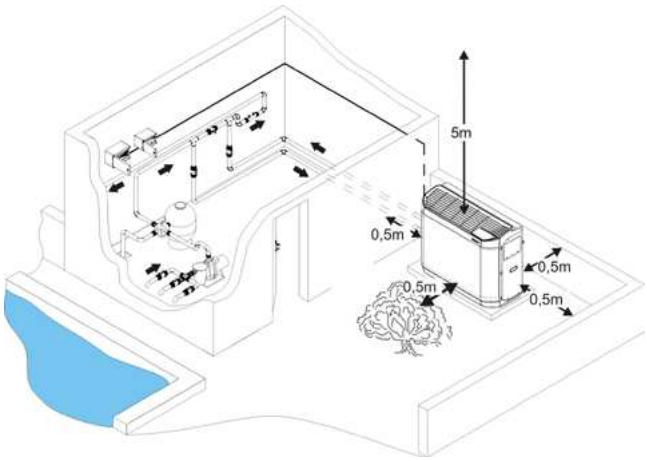

SPARE PARTS Spare parts p.254

OPTIONAL ACCESSORIES

	Winter cover			Cleaning kit HP
	Tailored, micro-perforated cover			Specifically formulated for evaporator cleaning. Kit includes an 5L can and a spray bottle
reference	R0839800	R0839900	R0840000	WMA03491

Z400iQ Stainless

Heating > Heat Pumps > Z400iQ Stainless

+ Unique design
+ Quiet & discrete
+ Embedded connectivity

3 YEAR WARRANTY

5 YEAR CONDENSER WARRANTY ANTI-CORROSION

NF HEAT PUMPS · SERVICES + · Ti22 TITANE INSIDE · ECO-FRIENDLY · REVERSIBLE · MADE IN EUROPE · iAquaLink CONTROL

	Z400iQ MD4 S	Z400iQ MD5 S	Z400iQ MD7 S	Z400iQ TD7 S	Z400iQ MD8 S	Z400iQ TD8 S	Z400iQ MD9 S	Z400iQ TD9 S
PRODUCT REFERENCE								
Stainless Steel 316L	WH000355	WH000356	WH000357	WH000358	WH000359	WH000360	WH000361	WH000362
NF PAC CERTIFICATION	NF	NF						

ACCESSORIES INCLUDED IN THE PACK

Winter cover	PVC fittings 1/2 unions Ø 50	Adjustable, anti-vibrations feet	Free app

EQUIPMENT

- Vertical air outlet
- Plastic parts in polypropylene, lateral panels in e poxy painted galvanized steel and 316L Stainless Steel front panel
- Digital display
- Heating priority mode (filtration pump control)
- 2-speed fan with Silence mode (automatic or manual)
- Automatic cooling mode
- Automatic defrosting (cycle inversion or forced ventilation)
- Anti-freeze thermostat (minimum operating temperature: -12°C)
- HP & LP safety pressure switch
- Water flow switch
- Titanium water exchanger condenser
- Rotary vane compressor
- Electronic expansion valve
- Refrigerant fluid: R410A
- Embedded Wi-Fi connectivity with dedicated app

	Z400iQ MD4 S	Z400iQ MD5 S	Z400iQ MD7 S	Z400iQ TD7 S	Z400iQ MD8 S	Z400iQ TD8 S	Z400iQ MD9 S	Z400iQ TD9 S
PERFORMANCE: AIR 28°C / WATER 28°C / HUMID. 80%								
Operating power (kW)	**8,57**	**12,10**	**15,62**		**18,65**		**22,05**	
Consumed power (kW)	1,76	2,47	3,20		3,82		4,51	
COP	4,89	4,90	4,89				4,90	
PERFORMANCE: AIR 15°C / WATER 26°C / HUMID. 70%								
Operating power (kW)	6,80	9,60	12,40		14,80		17,50	
Consumed power (kW)	1,62	2,28	2,95		3,52		4,16	
COP	4,20	4,21	4,20				4,21	
PERFORMANCE : AIR 7°C / WATER 26°C / HUMID. 70%								
Operating power (kW)	**4,70**	**7,36**	**9,26**		**11,22**		**13,76**	
Consumed power (kW)	1,38	2,16	2,72		3,30		4,05	
COP	3,41		3,40					

TECHNICAL SPECIFICATIONS

	Z400iQ MD4 S	Z400iQ MD5 S	Z400iQ MD7 S	Z400iQ TD7 S	Z400iQ MD8 S	Z400iQ TD8 S	Z400iQ MD9 S	Z400iQ TD9 S
Recommended pool volume* (m^3)	< 50	< 75	< 80		< 110		< 120	
Average water flow (m^3/h)	4	5	6		7		8	
Hydraulic connection	PVC 1/2union, Ø 50, glued							
Electric power supply	230V / 1 / 50Hz			400V / 3 / 50Hz	230V / 1 / 50Hz	400V / 3 / 50Hz	230V / 1 / 50Hz	400V / 3 / 50Hz
Nominal operating power (A)	6,9	10,2	13,4	6,7	17	6,8	19,4	8,2
Maximum operating power (A)	10	15	19	8	28	10	32	12
Recommended power cable size **	3 x 2.5			5 x 2.5	3 x 6	5 x 2.5	3 x 6	5 x 2.5
Refrigerant fluid quantity (kg)	1,2	1,3	1,45		1,8			
Acoustic Power (dB(A)) in Boost / Silent mode	64 / 61	65 / 63	66 / 63	68 / 66	64 / 61	65 / 62	64 / 62	66 / 63
Acoustic pressure at 10m (dB(A)) in Boost / Silent mode	36 / 33	37 / 35	38 / 35	40 / 38	36 / 33	37 / 34	36 / 34	38 / 35

*Estimated average values for a private pool with isothermal cover, from 15 May to 15 September. For year-round / indoor pool operation, check out the Bilpi sizing tool on your pro page.
**Cable not provided. Recommended section for a maximum length of 20 meters.

DIMENSIONS (MM) AND WEIGHT

Weight (kg)	70	71	90	94	105	105	110	110
A	1030				1145			
D	880		1027					
B	450				480			
C	479				509			

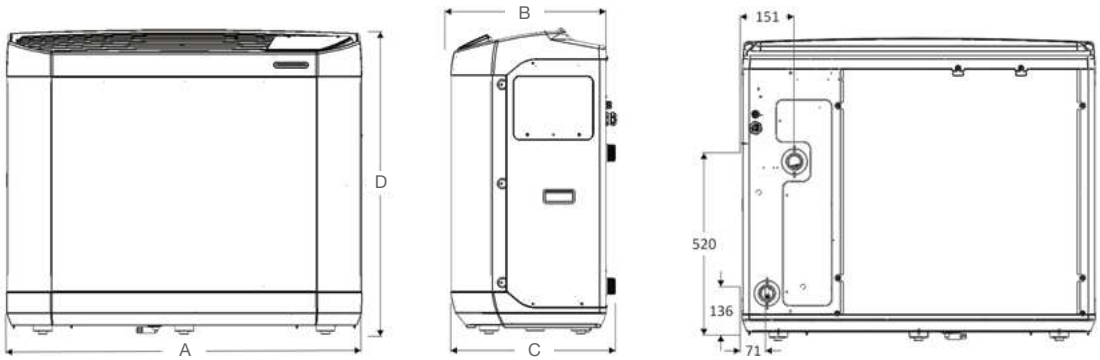

INSTALLATION

- Outside, close to the technical room, at sufficient distance from the pool (according to applicable electrical standards).
- On a stable, solid and level surface.
- Between the heat pump and its surroundings (walls, plants, etc.), maintain minimum distances as shown in the diagram below.

Spare parts p.254

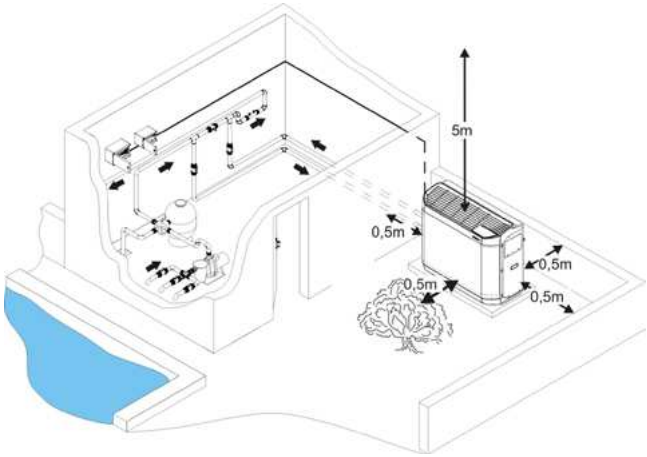

OPTIONAL ACCESSORIES

	Winter cover			Cleaning kit HP
	Tailored, micro-perforated cover			Specifically formulated for evaporator cleaning. Kit includes an 5L can and a spray bottle
reference	R0839800	R0839900	R0840000	WMA03491

ZS500

Heating > Heat Pumps > ZS500

+ Intelligent heating, perfect temperature
+ Inverter technology: quiet and economical
+ Fits easily into small spaces

3 YEAR WARRANTY

5 YEAR CONDENSER WARRANTY ANTI-CORROSION

NF HEAT PUMPS · SERVICES + · Ti22 TITANE INSIDE · ECO-FRIENDLY · REVERSIBLE · MADE IN EUROPE · OPTIONAL KIT TECHNICAL ROOM

within the limit of remaining stocks

	ZS500 MD4	ZS500 MD5	ZS500 TD5	ZS500 MD8	ZS500 TD8
PRODUCT REFERENCE					
Standard model	WH000001	WH000002	WH000003	WH000004	WH000005

ACCESSORIES INCLUDED IN THE PACK

Winter cover	PVC fittings 1/2 unions Ø 50	Adjustable, anti-vibrations feet

EQUIPMENT

- Vertical blowing
- Polypropylene body
- Digital display
- Heating priority mode (filtration pump control)
- Heatselect Technology : 3 operating modes
- Boost: max power for fast heat-up
- Smart: automatic power adjustment depending on temperature
- Ecosilence: reduced power, further energy savings and lowest noise level
- Automatic cooling mode
- Automatic defrosting (cycle inversion or forced ventilation)
- Anti-freeze thermostat (minimum operating temperature: -12°C)
- HP & LP safety pressure switch
- Water flow switch
- Titanium water exchanger condenser
- Inverter compressor: continuous power adaptation
- Electronic expansion valve
- Refrigerant fluid: R410A

PERFORMANCE: AIR 28°C / WATER 28°C / HUMID. 80%					
Operating power (kW @ max-min speed)	**12 - 7.4**	**15.3 - 7.8**	**15.3 - 7**	**20 - 10.5**	**20 - 10.4**
Average Consumed power (kW)	1,2	1,6		2,6	
Average COP	7,6	7		6	
PERFORMANCE: AIR 15°C / WATER 26°C / HUMID. 70%					
Operating power (kW @ max-min speed)	9.1 - 5.5	11.6 - 5.8	11.6 - 5.8	15 - 7.8	15 - 7.7
Average Consumed power (kW)	1,2	1,6		2,4	
Average COP	5,7	5,4		4,8	
TECHNICAL SPECIFICATIONS					
Recommended pool volume* (m^3)	< 65	< 80		< 110	
Average water flow (m^3/h)	4	5		6	
Hydraulic connection	PVC 1/2union, Ø 40 or Ø 50, glued				
Electric power supply	230 V / 1 / 50 Hz		400V / 3 / 50Hz	230 V / 1 / 50 Hz	400 V / 3 / 50 Hz
Nominal operating power (A)	7,5	10	4,4	15	6
Maximum operating power (A)	10	13,9	6	22	8
Recommended power cable size **	3 x 2.5		5 x 2.5	3 x 6	5 x 2.5
Refrigerant fluid quantity (Kg)	1,3	1,5		2,4	2,6
Acoustic power max-min (dB(A))	62 - 54	66 - 57	66 - 56	67 - 53	67 - 57
Acoustic pressure at 10m max-min (dB(A))	34 - 26	38 - 29	38 - 28	39 - 25	39 - 29

*Estimated average values for a private pool with isothermal cover, from 15 May to 15 September. For year-round / indoor pool operation, check out the Bilpi sizing tool on your pro page.
**Cable not provided. Recommended section for a maximum length of 20 meters.

DIMENSIONS (MM) AND WEIGHT

	ZS500 MD4	ZS500 MD5	ZS500 TD5	ZS500 MD8	ZS500 TD8
Weight (kg)	54	60	60	70	70

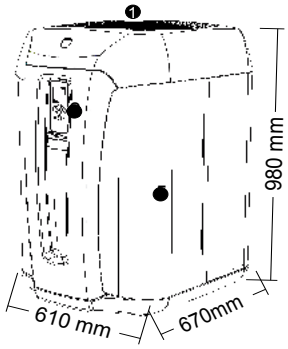

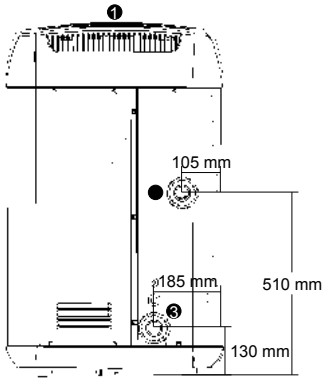

INSTALLATION

- Outside, close to the technical room, at sufficient distance from the pool (according to applicable electrical standards).
- On a stable, solid and level surface.
- Between the heat pump and its surroundings (walls, plants, etc.), maintain minimum distances as shown in the diagram below.

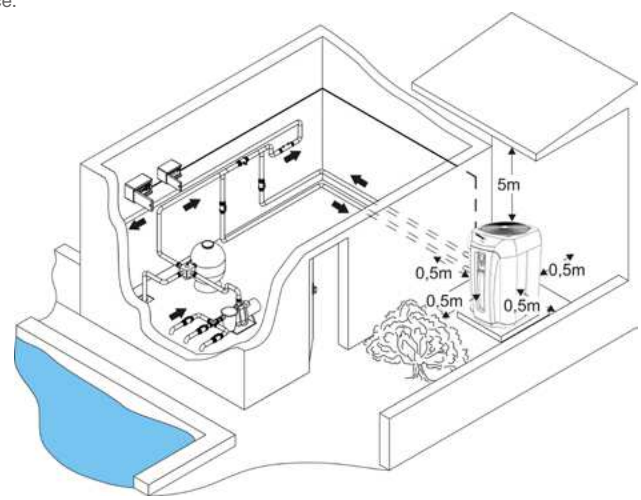

Spare parts p.256

OPTIONAL ACCESSORIES

	Winter cover	Cleaning kit HP	Remote control, ZS500	Technical Room Kit	Condensate tray, ZS500
	Tailored, micro-perforated cover	Specifically formulated for evaporator cleaning. Kit includes an 5L can and a spray bottle	Transfers information and commands of the embedded interface. 20m cable included.	Includes duct, grade, frame and attachment hardware for installation in technical room.	Collects condensate beneath the heat pump. Fixed with wall mounting brackets.
reference	R07096	WMA03491	WH000201	WH000202	R07240

Z500iQ

Heating > Heat Pumps > Z500iQ

+ Full inverter technology: silent and economical
+ Fits easily into small spaces
+ Embedded connectivity***

3 YEAR WARRANTY

5 YEAR CONDENSER WARRANTY ANTI-CORROSION

Color to be comfirmed

Ti 22 TITANE INSIDE · ECO-FRIENDLY · REVERSIBLE · MADE IN EUROPE · iAquaLink CONTROL · OPTIONAL KIT TECHNICAL ROOM

	Z500iQ MD4	Z500iQ MD5	Z500iQ TD5	Z500iQ MD8	Z500iQ TD8
PRODUCT REFERENCE					
Standard model	WH000365	WH000366	WH000367	WH000368	WH000369

ACCESSORIES INCLUDED IN THE PACK

Winter cover	PVC fittings 1/2 unions Ø 50	Adjustable, anti-vibrations feet	Free app***

EQUIPMENT

- Vertical blowing
- Polypropylene body
- Digital display
- Heating priority mode (filtration pump control)
- Heatselect Technology: 3 operating modes
- Boost: max power for fast heat-up
- Smart: automatic power adjustment depending on temperature
- Ecosilence: reduced power, further energy savings and lowest noise level
- Automatic cooling mode
- Automatic defrosting (cycle inversion or forced ventilation)
- Anti-freeze thermostat (minimum operating temperature: -12°C)
- HP & LP safety pressure switch
- Water flow switch
- Titanium water exchanger condenser
- Inverter compressor: continuous power adaptation
- Electronic expansion valve
- Refrigerant fluid: R410A
- Embedded Wi-Fi + Bluetooth connectivity

PERFORMANCE: AIR 28°C / WATER 28°C / HUMID. 80%					
Operating power (kW @ max-min speed)	**12 - 7.4**	**15.3 - 7.8**	**15.3 - 7**	**20 - 10.5**	**20 - 10.4**
Average Consumed power (kW)	1,2	1,6		2,6	
Average COP	7,6	7		6	
PERFORMANCE: AIR 15°C / WATER 26°C / HUMID. 70%					
Operating power (kW @ max-min speed)	9.1 - 5.5	11.6 - 5.8		15 - 7.8	15 - 7.7
Average Consumed power (kW)	1,2	1,6		2,4	
Average COP	5,7	5,4		4,8	

TECHNICAL SPECIFICATIONS

Recommended pool volume* (m^3)	< 65	< 80		< 110	
Average water flow (m^3/h)	4	5		6	
Hydraulic connection	PVC 1/2union, Ø 40 or Ø 50, glued				
Electric power supply	230 V / 1 / 50 Hz		400V / 3 / 50Hz	230 V / 1 / 50 Hz	400 V / 3 / 50 Hz
Nominal operating power (A)	7,5	10	4,4	15	6
Maximum operating power (A)	10	13,9	6	22	8
Recommended power cable size **	3 x 2.5		5 x 2.5	3 x 6	5 x 2.5
Refrigerant fluid quantity (kg)	1,3	1,5		2,4	2,6
Acoustic power max-min (dB(A))	62 - 54	66 - 57	66 - 56	67 - 53	67 - 57
Acoustic pressure at 10m max-min (dB(A))	34 - 26	38 - 29	38 - 28	39 - 25	39 - 29

*Estimated average values for a private pool with isothermal cover, from 15 May to 15 September. For year-round / indoor pool operation, check out the Bilpi sizing tool on your pro page.
**Cable not provided. Recommended section for a maximum length of 20 meters. ***iAquaLink™ app availability during the 2020 pool season

DIMENSIONS (MM) AND WEIGHT

	Z500iQ MD4	Z500iQ MD5	Z500iQ TD5	Z500iQ MD8	Z500iQ TD8
Weight (kg)	54	60	60	70	70

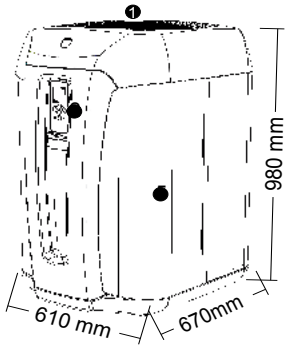

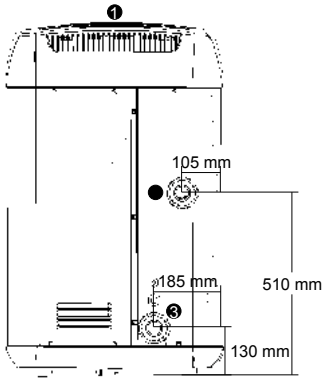

INSTALLATION

- Outside, close to the technical room, at sufficient distance from the pool (according to applicable electrical standards).
- On a stable, solid and level surface.
- Between the heat pump and its surroundings (walls, plants, etc.), maintain minimum distances as shown in the diagram below.

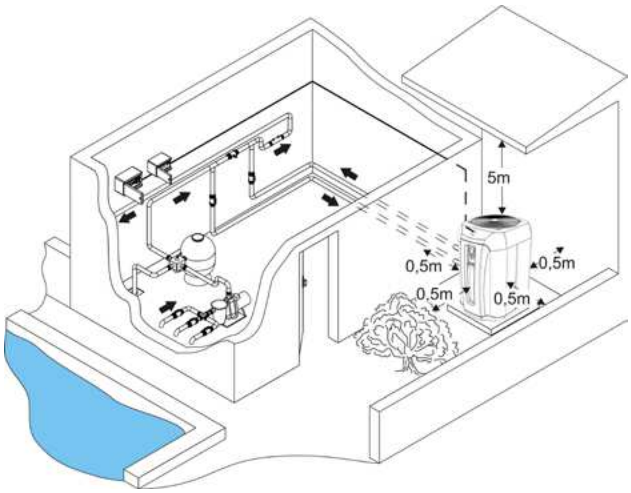

Spare parts p.258

OPTIONAL ACCESSORIES

	Winter cover	Cleaning kit HP	Technical Room Kit	Condensate tray, Z500iQ
	Tailored, micro-perforated cover	Specifically formulated for evaporator cleaning. Kit includes an 5L can and a spray bottle	Includes duct, grade, frame and attachment hardware for insta-llation in technical room.	Collects condensate beneath the heat pump. Fixed with wall mounting brackets.
reference	R07096	WMA03491	WH000202	R07240

Z600 Silent

Heating > Heat Pumps > Z600 Silent

+ Always the quietest
+ Industrial design, reflecting its strength
+ Made to order in Germany

2 YEAR WARRANTY

5 YEAR CONDENSER WARRANTY ANTI-CORROSION

SERVICES + | TITANE INSIDE | ECO-FRIENDLY | REVERSIBLE | MADE IN GERMANY

	Z600 Silent MD5	Z600 Silent MD7	Z600 Silent TD7	Z600 Silent TD9	Z600 Silent TD12
PRODUCT REFERENCE					
Standard model	WH000377	WH000378	WH000379	WH000380	WH000381

EQUIPMENT

- Horizontal blowing
- Aluminum body, reinforced acoustic protection
- Digital display
- Heating priority mode (filtration pump control)
- Automatic cooling mode
- Automatic defrosting (cycle inversion or forced ventilation)
- Anti-freeze thermostat (minimum operating temperature: -8°C)
- HP & LP safety pressure switch
- Water flow switch
- Titanium water exchanger condenser
- Rotary vane compressor
- Thermostatic expansion valve
- Refrigerant fluid: R410A

PERFORMANCE: AIR AT 24°C / WATER AT 27°C / HUMIDITY 80%					
Operating power (kW)	**12,4**	**16,2**		**25,7**	**34,7**
Consumed power (kW)	1,83	2,38	2,35	3,93	5,18
COP	6,7	6,8		6,5	6,6
PERFORMANCE: AIR AT 16°C / WATER AT 25°C / HUMIDITY 80%					
Operating power (kW)	10,2	13,8		20,6	27,9
Consumed power (kW)	1,8	2,51	2,4	3,7	5
COP	5,6	5,5	5,8	5,5	5,6

TECHNICAL SPECIFICATIONS					
Recommended pool volume* (m^3)	< 60	< 80		< 120	< 160
Average water flow (m^3/h)	8	9		15	17
Hydraulic connection	3 piece union fitting, PVC, Ø50, glued				
Electric power supply	230 V / 1 / 50Hz	230 V / 1 / 50 Hz	400 V / 3 / 50Hz		
Nominal operating power (A)	9,2	12,7	5,2	8,3	10,8
Recommended power cable size **	3 x 2.5	3 x 4	5 x 2.5		5 x 4
Electrical protection	1P+N 16A		3P+N 16A		
Refrigerant fluid quantity (kg)	0,8	1,65		1,8	2,8
Acoustic power (dB(A))	58			60	
Acoustic pressure at 10m (dB(A))	30			32	

*Estimated average values for a private pool with isothermal cover, from 15 May to 15 September. For year-round / indoor pool operation, check out the Bilpi sizing tool on your pro page.
**Cable not provided. Recommended section for a maximum length of 20 meters.

DIMENSIONS (MM) AND WEIGHT

	Z600 Silent MD5	Z600 Silent MD7	Z600 Silent TD7	Z600 Silent TD9	Z600 Silent TD12
Weight (kg)	95	106	106	180	212
L	1300	1450	1450	1450	1450
H	780	970	1940	970	1560
A	384	384	384	384	384
B	97,5	97,5	97,5	97,5	97,5
C	177,5	177,5	177,5	177,5	177,5
D	50	50	50	50	50
E	138	138	138	897	1088

Z600 Silent MD5 MD7 and TD7

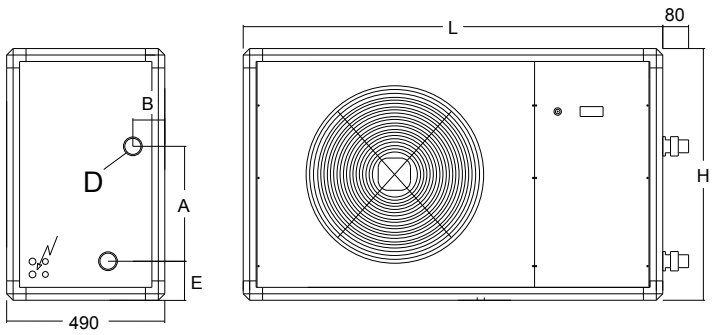

Z600 Silent TD9 and TD12

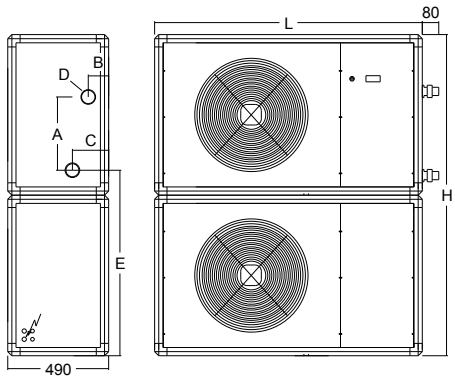

INSTALLATION

- Outside, close to the technical room, at sufficient distance from the pool (according to applicable electrical standards).
- On a stable, solid and level surface.
- Between the heat pump and its surroundings (walls, plants, etc.), maintain minimum distances as shown in the diagram below.

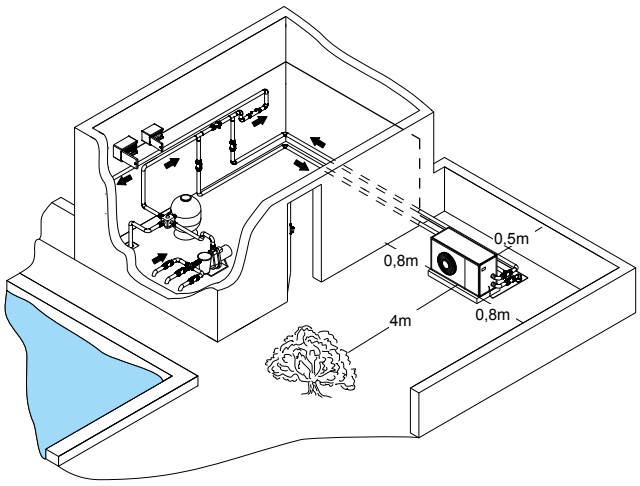

OPTIONAL ACCESSORIES

	Cleaning kit HP	Remote control, Z600
	Specifically formulated for evaporator cleaning. Kit includes an 5L can and a spray bottle	Transfers information and commands of the embedded interface. (Cable not provided).
reference	WMA03491	R0871200

Z700 Duo

2 YEAR WARRANTY

5 YEAR CONDENSER WARRANTY ANTI-CORROSION

+ A single device to heat both your pool and pool room
+ Substantial energy savings
+ Compact installation

SERVICES +

Ti22 TITANE INSIDE

ECO-FRIENDLY

MADE IN FRANCE

	Z700 Duo MD5	Z700 Duo TD5	Z700 Duo MD8	Z700 Duo TD8
PRODUCT REFERENCE				
Standard model	WH000266	WH000267	WH000268	WH000269

ACCESSORIES INCLUDED IN THE PACK

Hydraulic kit	Anti-vibrating pads (x5)	PVC fittings and joints (x2)	Copper fittings and joints (x2)

AIR HEATING PERFORMANCE 15°C / HOT WATER COIL 42°C/49°C				
Operating power (kW)	**9,7**		**12**	
Consumed power (kW)	3,5		4,2	
COP	2,8		2,9	
WATER HEATING PERFORMANCE: AIR 15°C / WATER 26°C / HUMID. 70%				
Operating power (kW)	12,5		15,2	
Consumed power (kW)	2,6		3,1	
COP	4,8		4,9	
TECHNICAL SPECIFICATIONS				
Recommended pool volume* (m^3)	< 60		< 75	
Average water flow (m^3/h)	5,5		6,5	
Electric power supply	230V / 1 / 50 Hz	400V / 3 / 50 Hz	230V / 1 / 50 Hz	400V / 3 / 50 Hz
Recommended power cable size **	3 x 10	5 x 4	3 x 16	5 x 6
Maximum operating power with electric heating option (A)	48	18	57	20,5
Refrigerant fluid quantity (kg)	4,64		4,75	
Acoustic power (dB(A))	67		65	
Acoustic pressure at 10m (dB(A))	39		37	
Maximum recommended room volume (m^3)	250		300	

*Estimated average values for a private indoor pool at 28°C, with isothermal cover in a temperate area. For different conditions, check out the Bilpi sizing tool on your pro page.
**Cable not provided. Recommended section for a maximum length of 20 meters.

EQUIPMENT

- Dual Purpose heat pump, water heating / air heating, combined with Zodiac dehumidifiers featuring hot water coil
- Horizontal blowing
- Electro plated steel, polyester powder coated body
- Digital display
- Automatic de frosting (cycle inversion)
- Anti-freeze thermostat (minimum operating temperature: -8°C)
- HP & LP safety pressure switch
- Pool water heating circuit: Water flow switch, titanium water exchanger condenser
- Hot water coil feeding: circulating pump, stainless steel water exchanger condenser, 6kW extra electrical heating
- Scroll compressor
- Thermostatic expansion valves
- Refrigerant fluid: R410A

DIMENSIONS (MM) AND WEIGHT

	Z700 Duo MD5	Z700 Duo TD5	Z700 Duo MD8	Z700 Duo TD8
Weight (kg)	192	192	205	205

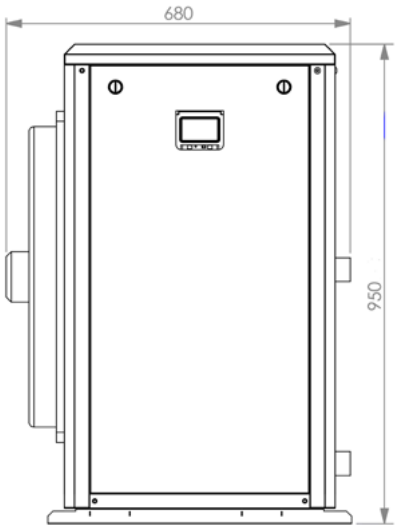

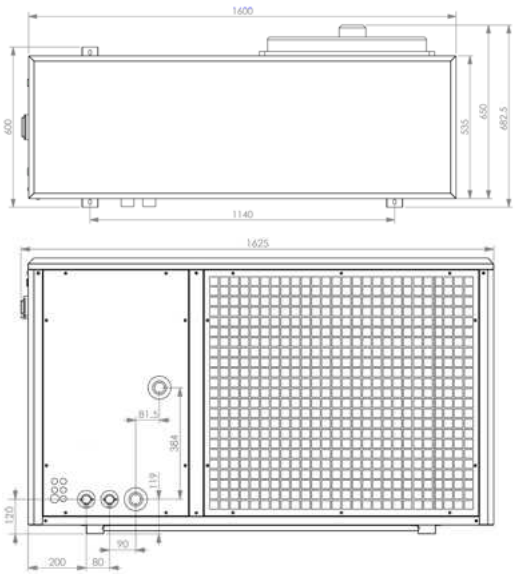

INSTALLATION

- Outside, close to the technical room, at sufficient distance from the pool (according to applicable electrical standards).
- On a stable, solid and level surface.
- Between the heat pump and its surroundings (walls, plants, etc.), maintain minimum distances as shown in the diagram below.

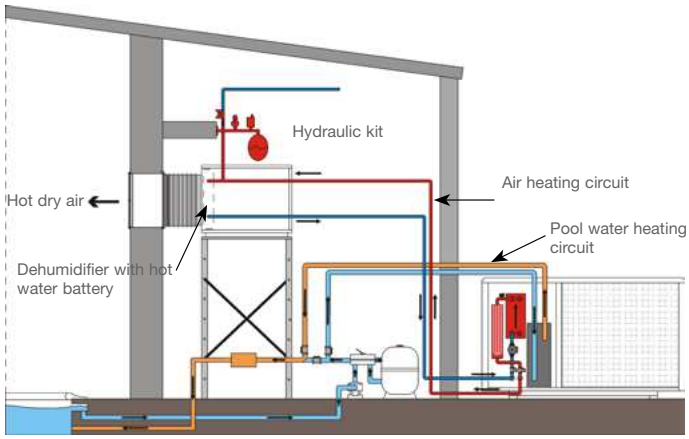

Z700 Duo

AOPTIONAL ACCESSORIES

	Cleaning kit HP	Remote contol, Z700	Condensate tray, Z700
	Specifically formulated for evaporator cleaning. Kit includes an 5L can and a spray bottle	Transfers information and commands of the embedded interface. (Cable not provided).	Collects condensate beneath the heat pump. Fixed with wall mounting brackets.
reference	WMA03491	R07855	R07856

Power Force

Heating > Heat Pumps > Power Force

+ Certified performances
+ Variable speed fan, quiet and energy-saving
+ Year-round operation down to -12°C

2 YEAR WARRANTY

5 YEAR CONDENSER WARRANTY ANTI-CORROSION

NF HEAT PUMPS · SERVICES + · Ti22 TITANE INSIDE · ECO-FRIENDLY · REVERSIBLE · MADE IN EUROPE

	Power Force TD25	Power Force TD35
PRODUCT REFERENCE		
Standard model	W20PFORCE25TD	W20PFORCE35TD

ACCESSORIES INCLUDED IN THE PACK

PVC fittings unions 63

Anti-vibrating pads

EQUIPMENT

- Horizontal blowing
- Galvanized steel, epoxy painted body
- Digital display
- Heating priority mode (filtration pump control)
- Variable speed fan, automatic speed adjustment
- Automatic cooling mode
- Automatic defrosting (cycle inversion or forced ventilation)
- Anti-freeze thermostat (minimum operating temperature: -12°C)
- HP & LP safety pressure switch
- Water flow switch
- Titanium water exchanger condenser
- Scroll compressor
- Electronic expansion valve
- Refrigerant fluid: R410A

PERFORMANCE: AIR 28°C / WATER 28°C / HUMID. 80%		
Operating power (kW)	**33**	**45,5**
Consumed power (kW)	6,1	8,6
COP	5,4	5,3
PERFORMANCE: AIR 15°C / WATER 26°C / HUMID. 70% NF		
Operating power (kW)	28,7	37
Consumed power (kW)	5,6	7,6
COP	5,1	4,9

TECHNICAL SPECIFICATIONS		
Recommended pool volume* (m^3)	Contact us	
Average water flow (m^3/h)	10	
Hydraulic connection	3 piece union fitting, PVC, Ø63, glued	
Electric power supply	400V / 3 / 50Hz	
Nominal operating power (A)	10,6	12,9
Maximum operating power (A)	14,2	18,1
Recommended power cable size **	5 x 4	
Refrigerant fluid quantity (kg)	6,4	6,3
Acoustic power (dB(A))	70	71
Acoustic pressure at 10m (dB(A))	42	42

**Cable not provided. Recommended section for a maximum length of 20 meters.

DIMENSIONS (MM) AND WEIGHT

	Power Force TD25	Power Force TD35
Weight (kg)	205	205

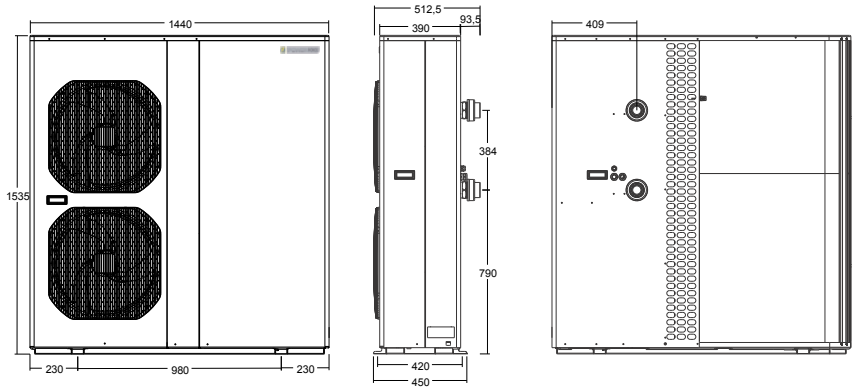

INSTALLATION

- Outside, close to the technical room, at sufficient distance from the pool (according to applicable electrical standards).
- On a stable, solid and level surface.
- Between the heat pump and its surroundings (walls, plants, etc.), maintain minimum distances as shown in the diagram below.
- Use an insulated copper or PER coupling between the heat pump and the dehumidifier.

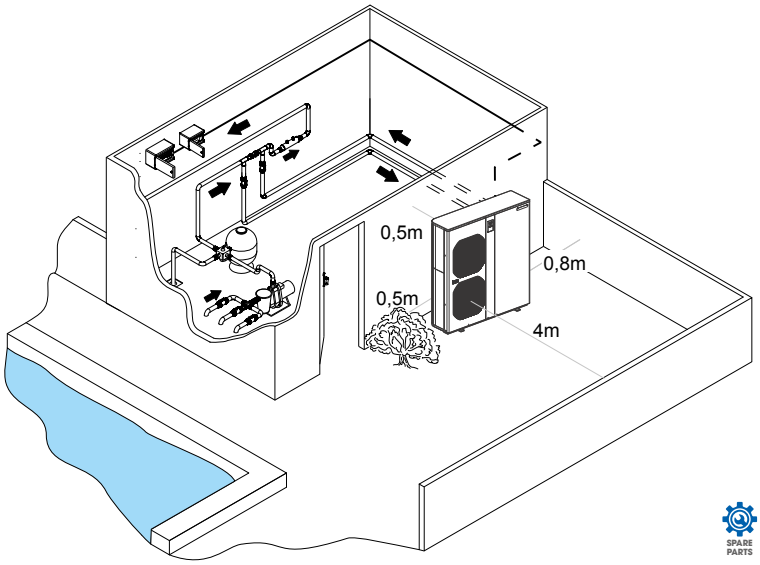

Spare parts p.260

OPTIONAL ACCESSORIES

	Cleaning kit HP	Remote control, PowerForce	Condensate tray, PowerForce
	Specifically formulated for evaporator cleaning. Kit includes an 5L can and a spray bottle	Transfers information and commands of the embedded interface. (Cable not provided).	Collects condensate beneath the heat pump. Fixed with wall mounting brackets.
reference	WMA03491	WTC04004	R07241

Z900

Heating > Heat Pumps > Z900

+ Vertical heat-pump for large pools
+ Year-round operation down to -12°C

2 YEAR WARRANTY

5 YEAR CONDENSER WARRANTY ANTI-CORROSION

SERVICES +

Ti 22 TITANE INSIDE

ECO-FRIENDLY

MADE IN EUROPE

	Z900 TD20	Z900 TD30	Z900 TD50
PRODUCT REFERENCE			
Standard model	WH000270	WH000271	WH000272

ACCESSORIES INCLUDED IN THE PACK

PVC fittings	Anti-vibrating feets

EQUIPMENT

- Vertical blowing
- Steel, epoxy painted body
- Digital display
- Automatic cooling mode
- Automatic defrosting (cycle inversion or forced ventilation)
- Anti-freeze thermostat (minimum operating temperature: -12°C)
- HP & LP safety pressure switch
- Water flow switch
- Titanium water exchanger condenser
- Scroll compressor
- Electronic expansion valve
- Refrigerant fluid: R410A

PERFORMANCE: AIR 28°C / WATER 28°C / HUMID. 80%			
Operating power (kW)	**51**	**78**	**113,8**
Consumed power (kW)	9,9	15,3	22,8
COP	5,1		5
PERFORMANCE: AIR 15°C / WATER 26°C / HUMID. 70%			
Operating power (kW)	46,2	69,7	97
Consumed power (kW)	10,2	15	22,9
COP	4,4	4,6	4,2

TECHNICAL SPECIFICATIONS			
Recommended pool volume* (m^3)	Contact us		
Average water flow (m^3/h)	15	20	25
Hydraulic connection	3 piece union fitting, PVC, Ø63, glued		3 piece union fitting, PVC, Ø90, glued
Electric power supply	400V / 3 / 50 Hz		
Nominal operating power (A)	19,2	35	43,5
Maximum operating power (A)	38	57	69
Recommended power cable size **	5 x 10	5 x 16	
Refrigerant fluid quantity (kg)	13,5	18,5	28,5
Acoustic pressure (dB(A))	75	77	81
Acoustic pressure at 10m (dB(A))	47	49	53

**Cable not provided. Recommended section for a maximum length of 20 meters.

DIMENSIONS (MM) AND WEIGHT

	Z900 TD20	Z900 TD30	Z900 TD50
Weight (kg)	430	520	837
A	73		97
B	1450		1730
C	324		588
D	179		204
E	233,5		211
F	480		755
G	1965		2091
H	951		1183

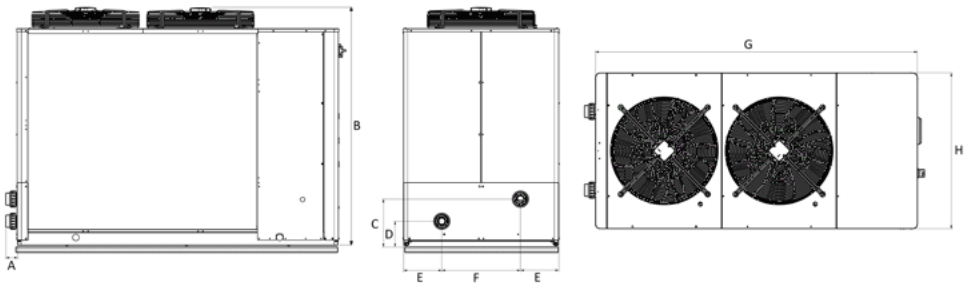

INSTALLATION

- Outside, close to the technical room, at sufficient distance from the pool (according to applicable electrical standards).
- On a stable, solid and level surface.
- Between the heat pump and its surroundings (walls, plants, etc.), maintain minimum distances as shown in the diagram below.

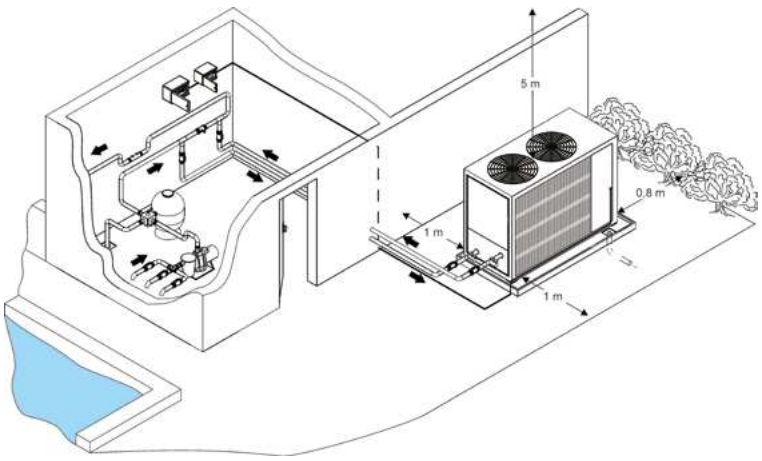

SPARE PARTS Spare parts p.262

OPTIONAL ACCESSORIES

	Cleaning kit HP	Remote control, Z900
	Specifically formulated for evaporator cleaning. Kit includes an 5L can and a spray bottle	Transfers information and commands of the embedded interface. (Cable not provided).
reference	WMA03491	R0770900

> ELECTRIC HEATERS

The simplest solution for a fast rise in temperature

Easy to install and to use, Zodiac® electric heaters heat your pool rapidly and keep the water at the desired temperature, for a very competitive purchase ex VAT Price. Compact, stand-alone units, they are fitted to the filtration system. Start filtration to raise the temperature (in 2 to 5 days).

> CHOOSING AN ELECTRIC HEATER

Several parameters should be considered when choosing a suitable electric heater. **Depending on the size of the pool to be heated and the desired use (temperature and period), the power of the system should be adapted,** from 3 kW to 120 kW.

In a small technical room, **install the system in 'L' configuration.** In-line installation limits pressure drops.

To control the desired temperature, **there are two types of thermostat: mechanical and digital.** Using a complete digital regulator, it is also possible to control timer settings.

The advantage is that it can use just one heating element when the outside temperature is relatively high (summer).

Ti 22 TITANE INSIDE

REFERENCE POINT
All Zodiac® electric heater models are equipped with titanium heating elements, making them very robust.

COMPARATIVE TABLE OF RANGES

	RE/L	RED LINE	RE/U	RE/I
Pool size	From 20 to 80 m³	From 20 to 80 m³	From 80 to 160 m³	> 150 m³
Power rating	From 3 to 12 kW	From 3 to 12 kW	From 12 to 24 kW	From 30 to 120 kW
Assembly type	L	In line	In line	In line
Modular type	-	-	•	•
Thermostat type	Mechanical	Digital	Digital	Digital

RE/L

Heating > Electric heater > RE/L

2 YEAR WARRANTY

+ L-shape, space-saving
+ 1 or 3 phase wiring (on-site configuration)
+ Mechanical thermostat

EASY INSTALLATION | SERVICES + | Ti22 TITANE INSIDE | MADE IN FRANCE

	RE/L 3	RE/L 6	RE/L 9	RE/L 12
PRODUCT REFERENCE				
Standard model	W40LE03	W40LE06	W40LE09	W40LE12

EQUIPMENT

- Control box
- Rotating mechanical 16-40°C thermostat
- Positive safety high temperature limiters
- Watertightness of electrical resistances with an EPDM collar
- Hypalon moulded electric connections
- Flow switch
- Power contactor
- Single or 3 phase wiring (on-site configuration)
- RE/L 3, 6 and 9: simplified single-phase 230V -50/60Hz / three-phase 400V-50/60Hz power (three-phase 230V on request)
- RE/L 12: 400V-50/60Hz only

TECHNICAL SPECIFICATIONS

Maximum vol. (m^3)*	20	40	60	80
Operating power (kW)**	3	6	9	12
Maximum operating power Tri 400 V (A)***	5	9	13	18
Power cable size for tri 400 V (mm2)****	5 x 2,5	5 x 2,5	5 x 4	5 x 4
Maximum operating power Mono 230 V (A)***	14	27	40	
Power cable size for Mono 230 V (mm^2)****	3 x 4	3 x 6	3 x 10	
Min. flow (m^3/h)	5			
Max. flow (m^3/h)	22			
Hydraulic connection	PVC Ø 50 ou Ø 63			

* Private open-air pool, temperate climate with an isothermal cover from May 15th to September 15th. ** Manufacturing tolerance of + or -5%. *** Tolerance operating voltage +6 -10%. Grid power supply. **** For a maximum length of 20 metres.

DIMENSIONS (MM) AND WEIGHT

	RE/L 3	RE/L 6	RE/L 9	RE/L 12
Weight (kg)	4	4	5	5

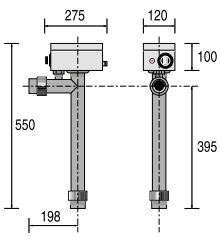

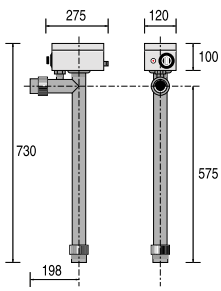

INSTALLATION

- Shipped with wall-mount bracket.
- In-line PVC hydraulic connection, Ø50 or 63.
- Supports any flow direction: just turn the device to match the water flow direction.

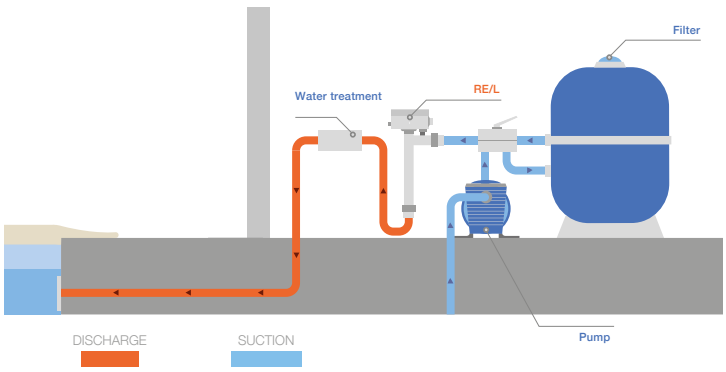

SPARE PARTS Spare parts p.281

RED LINE

2 YEAR WARRANTY

+ In-line, low pressure drop layout
+ 1 or 3 phase wiring (on-site configuration)
+ Full digital regulation

EASY INSTALLATION · SERVICES + · Ti22 TITANE INSIDE · MADE IN FRANCE

	REDLINE 3	REDLINE 6	REDLINE 9	REDLINE 12
PRODUCT REFERENCE				
Standard model	W40RDE3	W40RDE6	W40RDE9	W40RDE12

EQUIPMENT

- Control box with precision thermostat ± 0.5°C
- Digital display and timer
- Positive safety high temperature limiter
- Watertightness of electrical resistances with an EPDM collar
- Hypalon electric connections
- Flow switch
- Power contactors
- On/Off switch + Indicators
- REDLINE 3, 6 and 9: simplified single-phase 230V-50/60Hz / three phase 400V-50/60Hz power (three-phase 230V on request)
- REDLINE 12: three-phase 400V-50/60Hz only

TECHNICAL SPECIFICATIONS

Maximum vol. (m^3)*	20	40	60	80
Operating power (kW)**	3	6	9	12
Maximum operating power Tri 400 V (A)***	5	9	13	18
Power cable size for tri 400 V (mm^2)****	5 x 2,5	5 x 2,5	5 x 4	5 x 4
Maximum operating power Mono 230 V (A)***	14	27	40	
Power cable size for Mono 230 V (mm^2)****	3 x 4	3 x 6	3 x 10	
Min. flow (m^3/h)	5			
Max. flow (m^3/h)	30	30		
Hydraulic connection	PVC Ø 50 ou Ø 63	1/2 PVC Ø 63 + reduction Ø 50		

* Private open-air pool, temperate climate with an isothermal cover from May 15th to September 15th. ** Manufacturing tolerance of + or -5%. *** Tolerance operating voltage +6 -10%. Grid power supply. **** For a maximum length of 20 metres.

DIMENSIONS (MM) AND WEIGHT

Weight (kg)	4

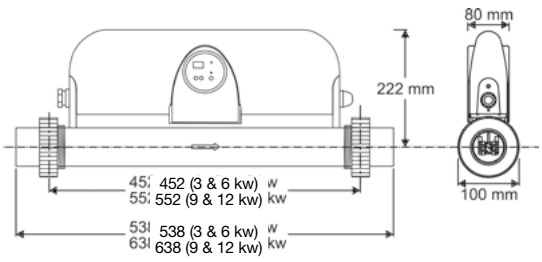

INSTALLATION

- In-line connection with two PVC unions, Ø63, and reducers, Ø63-50.
- Supports any flow direction: just turn the device to match the water flow direction.

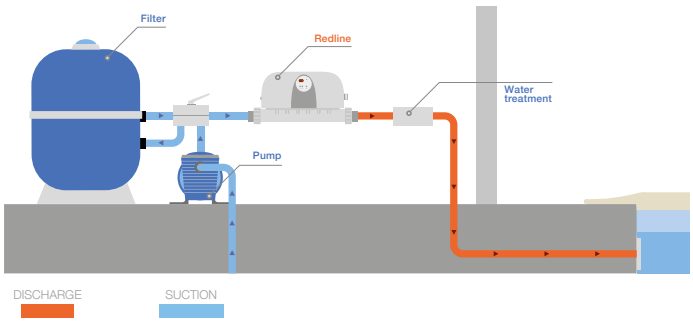

SPARE PARTS Spare parts p.280

RE/U

Heating > Electric heater > RE/U

2 YEAR WARRANTY

+ Full digital regulation
+ 2-stage power management
+ Maximum robustness

EASY INSTALLATION · SERVICES + · Ti22 TITANE INSIDE · MADE IN FRANCE

	RE/U 12M	RE/U 15M	RE/U 15T	RE/U 18T	RE/U 21T	RE/U 24T
PRODUCT REFERENCE						
Standard model	W40TIT12M	W40TIT15M	W40TIT15	W40TIT18	W40TIT21	W40TIT24

EQUIPMENT

- Control box with precision thermostat ± 0.5°C
- Digital display and timer
- Positive safety high temperature limiter
- Pin water tightness using EPDM collars
- HYPALON electric connections
- Flow switch
- Power contactors
- Luminous control switches + indicators
- Pin water tightness using EPDM collars
- Single-phase 230V-50/60Hz or three-phase 400 V depending on model

TECHNICAL SPECIFICATIONS

Maximum vol. (m^3)*	80	100	100	120	140	160
Operating power (kW)**	6 + 6	6 + 9	6 + 9	9 + 9	9 + 12	12 + 12
Absorbed intensity (A)***	53	66	22	26	31	35
Section câble d'alimentation (mm^2)****	3 x 16	3 x 16	5 x 6	5 x 6	5 x 10	5 x 10
Min. flow (m^3/h)	5					
Max. flow (m^3/h)	22					
Hydraulic connection	PVC Ø 50 ou Ø 63					

* Private open-air pool, temperate climate with an isothermal cover from May 15th to September 15th. ** Manufacturing tolerance of + or -5%. *** Tolerance operating voltage +6 -10%. Grid power supply. **** For a maximum length of 20 metres.

DIMENSIONS (MM) AND WEIGHT

Weight (kg)	12

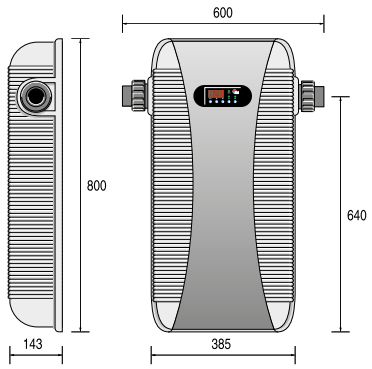

INSTALLATION

- In-line PVC hydraulic connection, Ø63 (exterior) or Ø50 (interior).
- Supports any flow direction: just turn the flow switch and reverse the control and safety sensors.

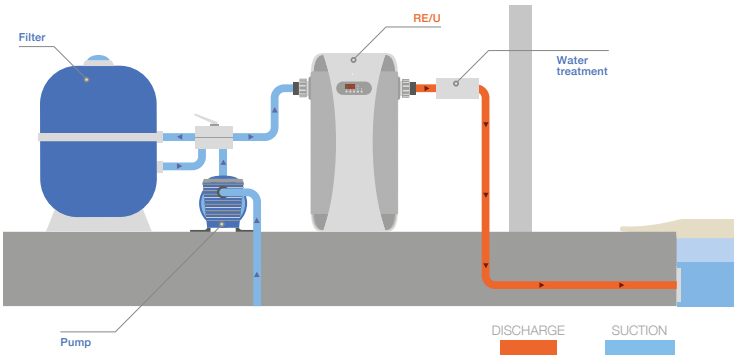

SPARE PARTS Spare parts p.282

RE/I

Heating > Electric heater > RE/I

2 YEAR WARRANTY

+ Full digital regulation
+ 2-stage power management
+ Maximum robustness

EASY INSTALLATION · SERVICES + · Ti22 TITANE INSIDE · MADE IN FRANCE

	Mid Power				High Power			
	RE/I 30T	RE/I 36T	RE/I 42T	RE/I 48T	RE/I 60T	RE/I 84T	RE/I 96T	RE/I 120T
PRODUCT REFERENCE								
Standard model	W40TIT30	W40TIT36	W40TIT42	W40TIT48	W40TIT60	W40TIT84	W40TIT96	W40TIT120

EQUIPMENT

- Control box with precision thermostat ±0.5°C
- Digital display and timer
- Positive safety high temperature limiters
- Watertightness of electrical resistances with an EPDM collar
- HYPALON electric connection
- Flow switch
- Power contactors
- Luminous control switches
- U format allowing an easy assembly and water retention
- Factory installed power modulation (2 manual stages)
- Three-phase wiring 400V-50/60Hz only

TECHNICAL SPECIFICATIONS

Maximum vol. (m^3)*	Contact us							
Voltage	400V/3N/50Hz							
Operating power (kW)**	12 + 18	12 + 24	18 + 24	24 + 24	24 + 36	36 + 48	48 + 48	60 + 60
Absorbed intensity (A) ***	44	52	61	70	87	122	139	174
Water flow (m^3/h)	20 à 30				30 à 50			
Hydraulic connection	PVC half-unions, ø 63, glued				2 flanges, DN 80, with glued PVC fitting, Ø 90			

* Carry out a complete thermal assessment before going further. ** Tolerance operating voltage +6 -10%. Grid power supply. *** Manufacturing tolerance of + or -5%.

DIMENSIONS (MM) AND WEIGHT

	RE/I 30T	RE/I 36T	RE/I 42T	RE/I 48T	RE/I 60T	RE/I 84T	RE/I 96T	RE/I 120T
Weight (kg)	30	30	33	33	49	51	53	58

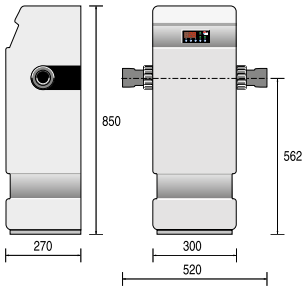

RE/I medium power (RE/I 30 to 48)

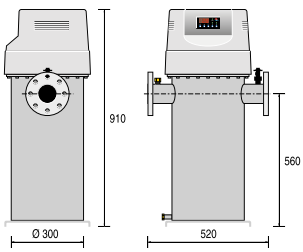

RE/I high power (RE/I 60 to 120)

INSTALLATION

- In-line hydraulic connection with two PVC unions, Ø63 (RE/I 30 à 48), or two flanges, DN80 (RE/I 60 à 120).
- Supports any flow direction: just turn the flow switch and reverse the control and safety sensors.
- Plan on installing a by-pass if the filter pump flow is greater than 50 m3

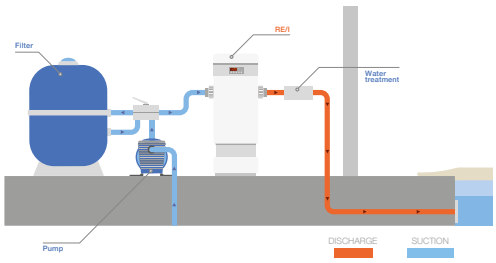

SPARE PARTS Spare parts p.282

> HEAT EXCHANGERS

Heating the pool using the domestic heating

Installed close to the boiler, Zodiac® heat exchangers use the heating circuit in the house to heat the water in the swimming pool.
Very financially advantageous, they are also very efficient and provide a **rapid temperature rise** (1 to 2 days).

Heat Line Plus

Uranus pre-assembled titanium plates

Ti 22 TITANE INSIDE

REFERENCE POINT
All Zodiac® heat exchangers are fitted with titanium pipes and plates making them very robust.

> CHOOSING A HEAT EXCHANGER

Several parameters are considered when choosing a heat exchanger. Depending on the size of the pool to be heated, the desired use (temperature and period) and temperature of the primary heating circuit, the appropriate heat exchanger should be selected.

Zodiac® heat exchangers are **compatible with all domestic heating systems.**
With more than 17 models, they are suitable for all installations.

COMPARATIVE TABLE OF RANGES	HEAT LINE			URANUS +	
	Unequipped	Plus, without circulating pump	Plus, with circulating pump	Unequipped	Plus
Application	All heating types			All heating types	
Power with primary at 90°C	From 20 to 70 kW			From 35 to 240 kW	
Power with primary at 45°C	From 4 to 14 kW			From 13 to 57 kW	
Assembly type	In line without bypass			L with bypass	
Heat exchanger type	Titanium multi-tube			Titanium plates	
Power pack		•	•		•
Flow switch		•	•		•
Regulation		•	•		•
Circulating pump			•		•

Heat Line - Unequipped, Plus without circulating pump & with circulating pump

2 YEAR WARRANTY

+ Compatible with all types of home heating systems (Heat Pump, Boiler, Geothermal, Solar)
+ Versatile installation concept
+ Digital regulation

Unequipped

Plus with regulation and circulating pump

Plus with regulation and without circulating pump

EASY INSTALLATION · SERVICES + · Ti22 TITANE INSIDE · MADE IN FRANCE

	HEATLINE 20	HEATLINE 40	HEATLINE 70
PRODUCT REFERENCE			
Unequipped	W49NT20	W49NT40	W49NT70
Plus, without circulating pump	W49KT20W	W49KT40W	W49KT70W
Plus, with circulating pump	W49KT20	W49KT40	W49KT70

EQUIPMENT

- Injected noryl Polyamide casing
- TITANIUM tubes
- Check valve
- Low consumption circulating pump, A class (1)
- Reversible interface (allowing right or left pool water inlet)
- Flow switch (2)
- Pre-wired electric box with 230 V plug (2)
- Digital regulation (2)
- Reversible installation layout

(1) On «Plus» models with circulating pump (2) On «Plus» models with and without circulating pump

TECHNICAL SPECIFICATIONS			
Maximum vol. (m^3)*	50	120	200
Power with primary at 90°C (kW)	20	40	70
Power with primary at 60°C (kW)	8,5	17	30
Power with primary at 45°C (kW)	4	8	14
Max. pressure (pool circuit)	2 bar		
Max. permitted temperature	90 °C		
CONNECTIONS			
PRIMARY Heating (Unequipped model)	Ø26/34 F / Ø26/34 M	Ø26/34 F - Ø26/34 M	Ø26/34 F / Ø26/34 M
SECONDARY Pool	PVC Ø63 ou 50		
FLOW (m^3/h)			
PRIMARY Heating	0,9	1,7	3
SECONDARY Pool	10	15	20
LOAD LOSS (MMCE)			
PRIMARY Heating	150	200	300
SECONDARY Pool	500	800	1000

* Private open-air pool, temperate climate with an isothermal cover and primary at 90°C from May 15th to September 15th

DIMENSIONS (MM) AND WEIGHT

	HEATLINE 20	HEATLINE 40	HEATLINE 70
Unequipped	3 kg	3 kg	4 kg
Plus, without circulating pump	4 kg	4 kg	5 kg
Plus, with circulating pump	6,5 kg	7 kg	12 kg

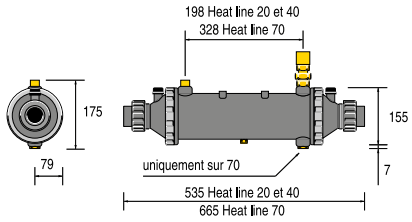

Heat Line Unequipped

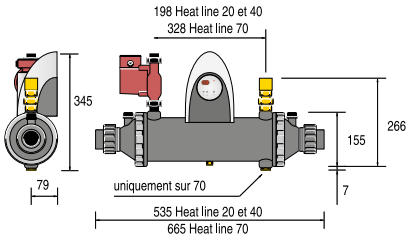

Heat Line Plus with circulating pump

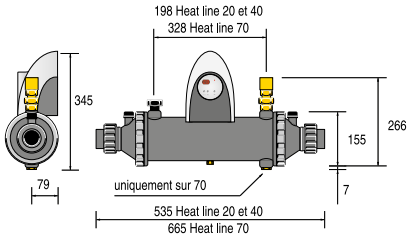

Heat Line Plus without circulating pump

INSTALLATION

- In the technical facility nearby the boiler at the filtering system output (without a by-pass).
  Horizontal in-line position on the pipe. Primary supply from above.
- Single-phase electric power supply 230V
- Primary and secondary circuits' flow may be reversed by turning the exchanger.
- Special cases: exchanger powered using solar panels.
- The exchanger must be chosen according to pool heating requirements, exchanger specifications with primary at 45 °C or 60 °C (see specifications table) and power returned by the solar panels. In all cases, the exchanger must be supplied from a solar tank installed between the panels and the exchanger.
- Heat Line exchangers are not compatible with direct connection to solar panels.
- Caution: maximum primary source temperature = 90 °C Maximum pressure = 2 bar Exchanger installed with existing wall-mounted boiler or with boiler whose regulator is in the boiler's interior.

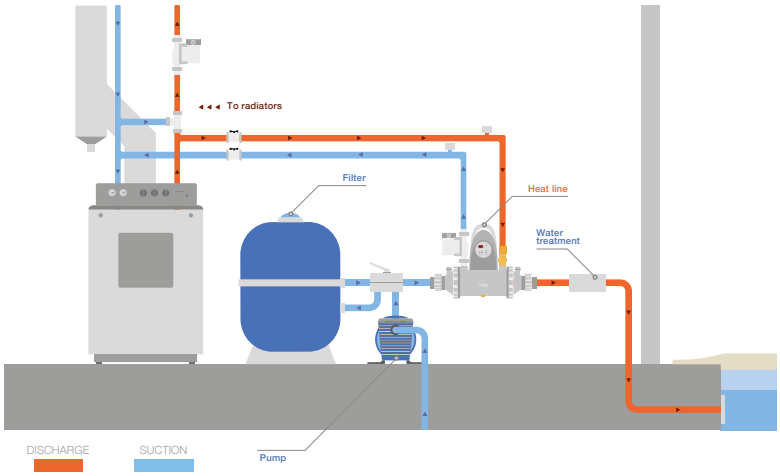

Spare parts p.284

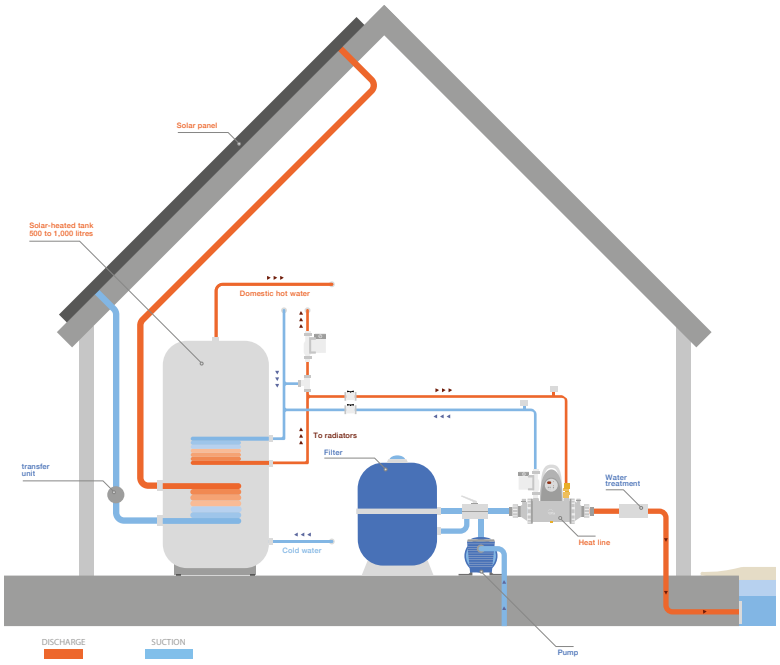

Uranus + Unequipped and Plus

2 YEAR WARRANTY

+ Compatible with all types of home heating systems (Heat Pump, Boiler, Geothermal, Solar)
+ High heat exchange
+ Digital regulation

EASY INSTALLATION

SERVICES +

Ti22 TITANE INSIDE

MADE IN FRANCE

URANUS Unequipped

URANUS PLUS

	URANUS 35	URANUS 70	URANUS 120	URANUS 240
PRODUCT REFERENCE				
Unequipped	WJ000001	WJ000003	WJ000005	WJ000007
Plus	WJ000002	WJ000004	WJ000006	WJ000008

EQUIPMENT

- Appliance completely assembled and wired
- High performance plate exchanger TITANIUM plates
- PRIMARY with adjustable accelerator 2 1/4 turn valves, 1 valve - male thread. Ø 26/34 with Ø 20/22 soldering cartridges
- SECONDARY - PVC Ø 50
- Digital display thermostat
- Flow switch
- Mono 230 V wiring from a mains outlet
- Purge or emptying cap

TECHNICAL SPECIFICATIONS				
Power with primary at 90°C (kW)	55	80	120	240
Power with primary at 60°C (kW)	27	38	63	123
Power with primary at 45°C (kW)	15	21	34	68
Max. pressure (pool circuit)	3 bar / 2 bar			
Max. permitted temperature	90 °C / 40°C			
CONNECTIONS				
PRIMARY Heating (Unequipped model)	Ø20/22	Ø20/22	Ø20/22	Ø26/28
SECONDARY Pool	PVC Ø50	PVC Ø50	PVC Ø50	PVC Ø50
FLOW (m^3/h)				
PRIMARY Heating	1,6	2,1	2,8	6,3
SECONDARY Pool	2	2,9	4,3	8,7
LOAD LOSS (MMCE)				
PRIMARY Heating	1500	1200	1000	2000
SECONDARY Pool	2400	2300	2500	3800

WEIGHT

	URANUS 35	URANUS 70	URANUS 120	URANUS 240
Unequipped	14 kg	15 kg	17 kg	31 kg
Plus	29 kg	30 kg	31 kg	50 kg

DIMENSIONS (MM) UNEQUIPPED MODEL

	URANUS 35-70-120	URANUS 240
Lht	255	407
L2	140	200
L3	50	60
Hht	380	500
H1	339	429
H2	41	75
H3	298	357

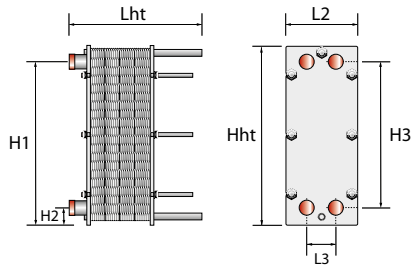

DIMENSIONS (MM) PLUS MODEL

	URANUS 35-70-120	URANUS 240
A	758	840
B	334	347
C	415	480
D	116	137
E	414	494
F	250	250
G	200	450
H	127	148
I	50	60

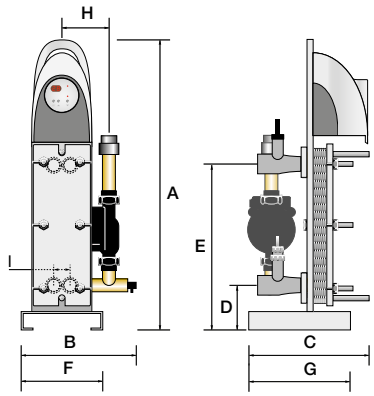

INSTALLATION

- In the technical facility nearby the boiler at the filtering system output (plan a by-pass).
- Single-phase electric power supply 230V
- In special cases: exchanger supplied from a geothermal or heat pump.
- The exchanger must be sized taking into account the heating needs of the pool, the specifications of the exchangers with primary at 45°C or 60°C (see specifications table) and the power of the geothermal. For correct operation of the geothermal we recommend installing a buffer tank as shown in the diagram below.

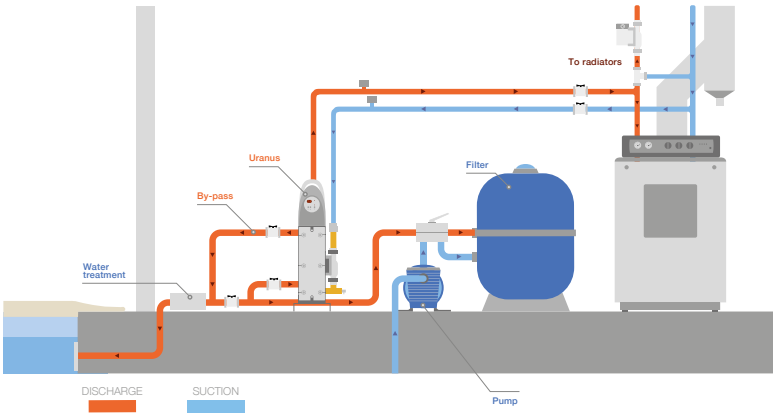

SPARE PARTS Spare parts p.286

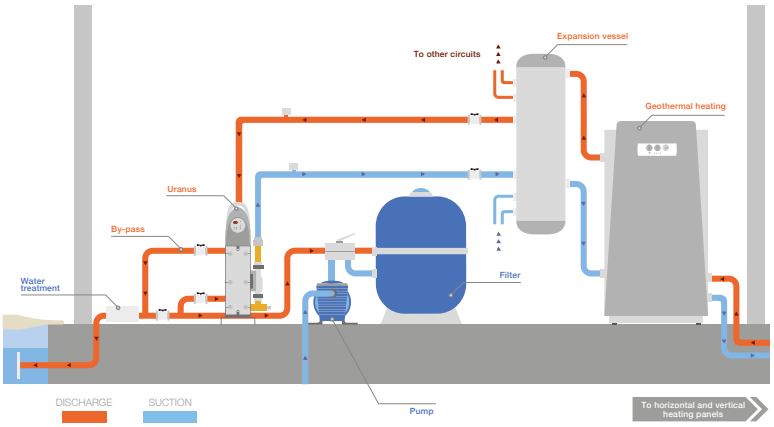

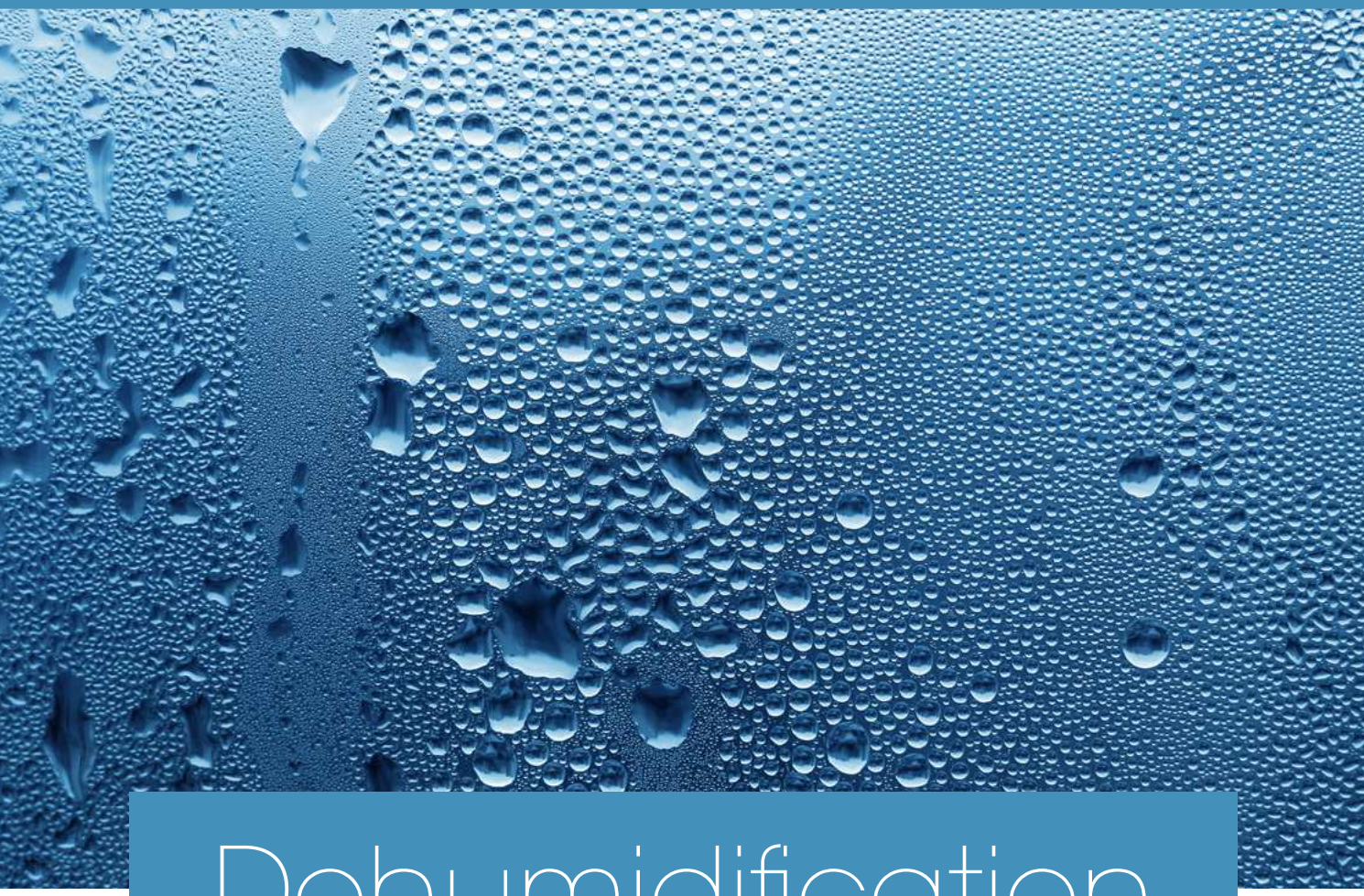

Dehumidification

INTRODUCTION	**P.94**
• DT 850 E	p.99
• Sirocco Free-discharge	p.100
• Sirocco Through-the-wall	p.102
• DF Through-the-wall	p.104
• DF ducted 403 - 408	p.106
• DF ducted 410 - 412	p.108
• CAE	p.110
• OMEGA	p.114
• ENERGY Fan	p.118
• CANAL FAST Fan	p.119
• Floor diffusers	p.120
• Ventilation accesories	p.122

> THE RIGHT DEHUMIDIFIER FOR EVERY POOL

A room or veranda sheltering a pool is a place where **the relative humidity in the air is high.** Water vapour trapped inside condenses on the cold walls, forming water droplets and condensation, while the air is progressively saturated with humidity. There are many consequences of these phenomena: **appearance of mould, peeling, rusting, etc.** To ensure the comfort of bathers and long life of an indoor pool, **it is essential to install a dehumidifier.**

> SWIMMING POOLS IN CONSERVATORIES

Given the large area of glazed surfaces in a conservatory, it is strongly recommended to install a dehumidifier system with a system of ducts fitted around the room.

> COVERED POOLS

- **For use from March to November:** a simple dehumidifier, free-standing or fitted, combined with a cover can ensure a comfortable atmosphere.
  The ambient air can be heated as necessary, but it is generally the sun's rays that increase the air temperature.
- **For use throughout the year:** only a gas or oil boiler, accompanied by a dehumidifier unit with a hot water coil installed in a room close to the shelter, can keep bathers comfortable throughout the year.

> SPAS

In a room housing a private pool, there is very often a spa, either integrated or independent of the pool. In this case, the quantity of water evaporated by the spa must be added to that evaporated by the pool and fit the appropriate equipment .

> PROFESSIONAL SWIMMING POOLS

The greater use and higher water temperature of this type of pool causes a much greater level of evaporation. Calculating evaporation here requires complete understanding of the parameters and equipment to conduct a thermal audit.

Important: it is essential to ensure replacement of fresh air at a minimum of 22 m^3/hr per person.

3 CRITERIA TO BE MET FOR OPTIMUM COMFORT:

1. **Water temperature:** from 26°C to 30°C, or higher for medical or professional uses.
2. **Air temperature:** from 26°C to 30°C, often set to the same value as the water temperature.
3. **Relative humidity:** between 60% and 70%. Below 60%, it feels too cool when getting out of the water.
   Above 70%, it feels too muggy and condensation forms in the room.

> 3 TYPES OF DEHUMIDIFYING SYSTEMS

Zodiac® offers a wide range of solutions, split into three categories: **free-discharge, through-the-wall and ducted units.**
All these systems operate on the principle of the heat pump: drawing in warm, moist air and blowing out warmer, dry air.

Free-discharge systems

Through-the-wall systems

Ducted systems

Ducted systems with air renewal

> FREE-DISCHARGE UNITS

These monoblock DT or Sirocco systems are **designed for small volumes and require no ducting.** The units can be placed **in the room housing the pool**, more than 2 metres from the pool.

This free-discharge solution is the **simplest and most economical** for maintaining the relative humidity at a comfortable 65% level in the room. However, it is not effective in dealing with condensation on the windows.

DT 850 E

SIROCCO Free-discharge

Through-the-wall DF

Through-the-wall SIROCCO

> THROUGH-THE-WALL

These Sirocco or DF monoblock systems are installed **in an adjacent plant room through the walls.** Only an inlet grille and an outlet grille are visible in the pool room.

This simple solution allows the **dehumidifier to be installed outside the pool hall (plant room adjacent to the pool)** but does not deal effectively with condensation on the windows.

> DUCTED MODELS

A ducted system (DF or unit) is the only solution for **dealing effectively with condensation on the windows,** because it is possible to fit outlet grilles along the glazed walls.

Only these grilles are visible in the pool room while the equipment itself can be installed **in the nearby plant room.**

Ducted DF

Ducted CAE

Ducted OMEGA

> DUCTED MODELS WITH AIR RENEWAL

These ducted units, marketed under the SET brand, **also manage air renewal in the pool** (and any surrounding spaces) and heating in the pool room with no need for additional equipment. Introducing fresh air from outside, with or without static energy **means you save energy**. This solution is designed for all pools with large glazed areas and for professional swimming pools.

This solution is designed for all pools with large glazed areas and for professional swimming pools.

We offer an entire series of complementary accessories to enable you to build your complete installation:

- ventilation accessories
- inlet and outlet grilles
- ducts and diffusers

> DEHUMIDIFIERS
A silent installation

> EXPRESSING THE NOISE LEVEL WITH PRECISION

Sound level is expressed:

- Either **as acoustic power dB(A):** this is the unmodified noise level of the emitting source.
- Or **as acoustic pressure dB(A):** this is the sound level perceived by the human ear.
  It depends on the installation environment and distance at which the measurement is made.
  It must therefore always include a measuring distance.

The further you are from the emitting source, the more the sound level falls: it is reduced by 6 dB(A) for every doubling of the distance.

Acoustic power
66 dB(A)

Acoustic pressure

2.5 m	5 m	10 m
50 dB(A)	44 dB(A)	38 dB(A)

To compare the noise level of several machines, check what type of value you have, power or pressure, and if it is pressure then at what distance was it measured!

NOISE SCALE

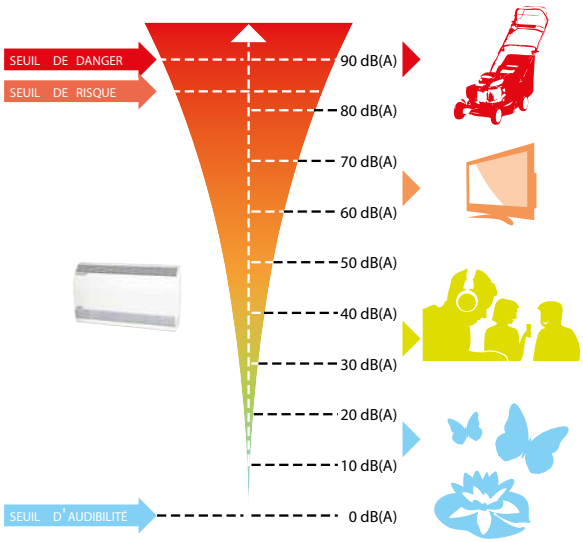

> REDUCE NOISE TRANSMISSION THROUGH THE DUCTS

Special attention will be given to the aeraulic networks:

- **Size the ducts appropriately for the air flow**, limit turbulent sections, provide straight lines between each turbulent section.
- **Reduce the transmission of vibrations through the ducts:**
  - Install sleeves where they pass through walls,
  - Use anti-vibration collars to support ducts,
  - Use flexible couplings between the equipment and the duct network.
- **Size the inlet and outlet grilles** appropriately for the air flow rates passing through them.
  Provide expansion chambers between the grille and the duct.
- **Fit a sound trap**, if necessary, in the outlet ducts, particularly to avoid the noise propagating.

Example of duct installation

> DEHUMIDIFIERS
A silent installation

Support frame

> RECOMMENDATIONS FOR INSTALLING A DEHUMIDIFIER

A dehumidifier system includes 'moving' parts (compressor, fan, etc.), vibrations from which can spread and build up.
A ducted unit installed in a plant room will provide the best possible noise solution.

Anti-vibration blocks

However, to avoid or reduce disturbances, a few installation rules should be observed:

- **Install the dehumidifier on suitable anti-vibration blocks.** Renew them if necessary, because they lose effectiveness over time.
- **Install the system** either on a mounting base independent from the building and weighing twice as much as the dehumidifier, or on a very rigid support frame.

> HELPING YOU SELECT AND WORK OUT THE REQUIRED DIMENSIONS OF YOUR EQUIPMENT

> OUR DESIGN OFFICE IS THERE FOR YOU EVERY DAY:

- **A team of technicians will advise you** in selecting products, working out the necessary dimensions, and installing them.
- To help develop your business, **we carry out almost 40,000 surveys each year!**
- **You benefit from unique expertise on dehumidification** for indoor pools, and for all your "Added Value" projects (equipment, accessories, ducted systems, etc.).
- The design office will help you to keep track of **"turnkey" projects** (quotes, plans, advice).

SERVICES +

REFERENCE POINT
Zodiac® offers service solutions to help you. Find these services in this catalogue using this pictogram.

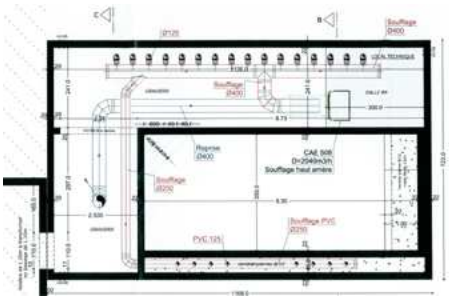

Create your plans in AUTOCAD !

Autocad is well-known to architects and others working in construction, and is used to create clear, accurate and versatile plans. Increase your chances of success significantly by using our teams' expertise in this field!

> HYGRO CONTROL
Simple dehumidification

Hygro Control is a hygro-thermostat designed exclusively by Zodiac® **for easy and intuitive control of the dehumidification equipment.**

HYGRO CONTROL

REFERENCE POINT
Find Zodiac® dehumidification products equipped with the Hygro Control function by locating this pictogram in the catalogue.

> HOW DOES IT WORK?

Hygro Control is an accurate and easy to use digital control unit for **setting the desired relative humidity.** Relative humidity characterises the moisture in the air, specifically the quantity of water present as gas in the air in the room or conservatory housing the pool.

If the dehumidifier is fitted with the 'heating' option, Hygro Control can also set the room air temperature.

The unit is supplied with every dehumidifier*. Mounted on the wall, it is connected to the dehumidifier.

* Except the DT 850 E model.

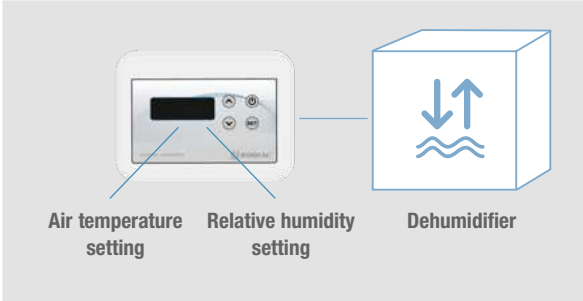

STANDARD INSTALLATION

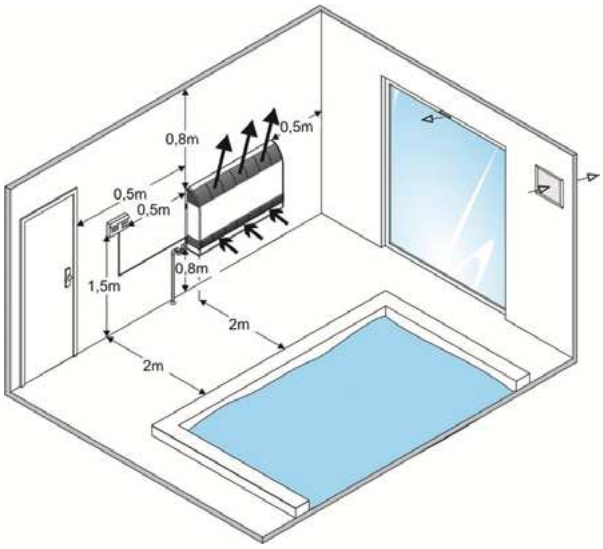

Example of an installation with a SIROCCO Free-discharge console

- Hygro Control should be installed at least 50cm from the outlet
- Do not put it above the system (SIROCCO) or above an outlet grille (CAE, DF, OMEGA)
- It should be at least 1.5m from the floor

Equipping a pool with a good roof and a suitable ventilation system for the room increases the efficiency of the dehumidification system.

DT 850 E Free-discharge

Dehumidification > DT 850 E - Free-discharge

2 ANS GARANTIE

+ Ideal for small pools
+ All-in-one, free-standing design: easy to install
+ Regulation with digital display

INSTALLATION FACILE

SERVICES +

TOUS TYPES

DT 850 E

PRODUCT REFERENCE

Standard model	W28DT850E410

EQUIPMENT

- Indoor, single block dehumidifier, to be installed in the area to be treated
- Sealed type thermodynamic circuit
- Very silent centhree phasefuge turbine
- Hermetic compressor with built-in protection
- Thermostatic defrosting using forced ventilation
- Electronic regulation using a built-in hygrometer
- Thermoformed anti-rust casing
- Washable air filter
- 2 ventilation speeds

TECHNICAL SPECIFICATIONS

Capacity (l/h)	2,2
Absorbed power* (W)	915
Operating power* (W)	2500
Acoustic pressure at 5m (dB(A))	22
Air flow (m^3/h)	500
Electric power supply	230 V / 1 / 50 Hz
Absorbed intensity (A)	4,15
Refrigerant fluid	R410A
Refrigerant fluid quantity (kg)	0,71

*in the following nominal conditions: air 30°C, humidity 70%.
For the best operation of the dehumidifier we recommend changing the filter every year.

DIMENSIONS (MM) AND WEIGHT

	DT 850 E
Weight (kg)	37

OPTIONAL ACCESSORIES

	Filter DT 850 / DT 850 E
reference	W28FIDT5

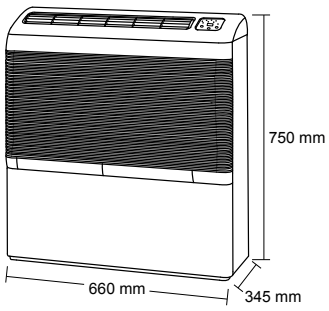

SPARE PARTS Spare parts p.293

Sirocco Free-discharge

2 ANS GARANTIE

+ All-in-one design, wall mounted in the pool hall
+ Available in 3 capacities (2,3 to 4,6 l/h)
+ Air heating options (electric heating or hot water coil)

INSTALLATION FACILE

HYGRO CONTROL

SERVICES +

	SIROCCO 55M Free-discharge	SIROCCO 80M Free-discharge	SIROCCO 110M Free-discharge	SIROCCO 110T Free-discharge
PRODUCT REFERENCE				
Standard model	W28SI55A	W28SI80A	W28SI110A	W28SI110AT
Model with electric heating option	W28SI55AE	W28SI80AE	W28SI110AE	W28SI110AET
	2kW	3kW	4,5 kW	4,5 kW
Model with hot water coil option	W28SI55AB	W28SI80AB	W28SI110AB	W28SI110ABT
	6kW	9kW	12kW	12kW

ACCESSORIES INCLUDED IN THE PACK

Hygro control box

TECHNICAL SPECIFICATIONS

Capacity (l/h)*	2,3	3,3	4,6	
Absorbed power* (W)	990	1100	1340	
Operating power* (W)	2080	2310	2810	
Acoustic pressure at 5m (dB(A))**	45,7	44,7	44,2	
Air flow (m^3/h)	600	800	1000	
Electric power supply	230 V / 1 / 50 Hz			400 V / 3N / 50 Hz
Nominal operating intensity (A)***	4,45	5,05	6,35	2,8
Max. absorbed intensity (A)***	5,9	8	9,8	3,8
Refrigerant fluid	R407C			
Refrigerant fluid quantity (kg)	0,47	0,74	0,87	
Evacuation of condensate	Flexible tube Ø12/18			

* Standard unit, in the following nominal conditions: air 30°C, humidity 70%.
** Values measured and certified in compliance with EN ISO 3741 & EN ISO 354 standards, by CCTM (Centre de Transfert de Technologie du Mans) on standard units.
*** Excluding the power consumption of electric heating options.

HOT WATER COIL SPECIFICATIONS

	SIROCCO 55M Free-discharge	SIROCCO 80M Free-discharge	SIROCCO 110M Free-discharge	SIROCCO 110T Free-discharge
Power (kW) with primary at 90/70°C	6	9	12	12
Power (kW) with primary at 45/40°C	2,1	2,6	3,3	3,3
Water flow (m^3/h) with primary at 90/70°C	0,25	0,42	0,53	0,53
Load loss (mmCE) with primary 90/70°C	410	370	650	650
Connection (mm)	15 / 21 male thread			

INSTALLATION

- The heating of the area can be included as an option, either using a hot water coil or by electric heating.
- Dehumidifier unit to be installed in the pool hall at more than 2 metres from the pool.

Spare parts p.293

Installation of an appliance with the hot water coil option

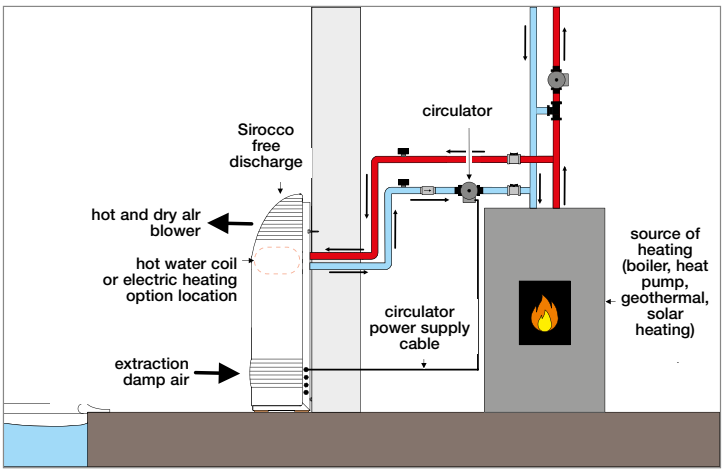

DIMENSIONS (MM) AND WEIGHT

	SIROCCO 55M Free-discharge	SIROCCO 80M Free-discharge	SIROCCO 110M Free-discharge	SIROCCO 110T Free-discharge
A	1030	1220	1410	1410
Number of grates	2 x 5	2 x 6	2 x 7	2 x 7
Weight (kg) (basic model)	65	75	85	

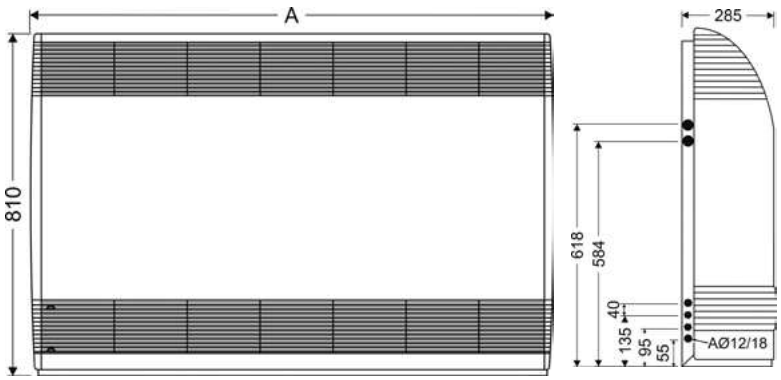

OPTIONAL ACCESSORIES

	Filter Sirocco 55M/55T Free-discharge	Filter Sirocco 80M/80T Free-discharge	Filter Sirocco 110M/110T Free-discharge
reference	WSD01913	WSD01914	WSD01915

For the best operation of the dehumidifier we recommend changing the filter every year.

Sirocco Through-the-wall

2 ANS GARANTIE

+ Easy intallation, hidden in an adjacent technical room
+ Available in 3 capacities (2,3 to 4,6l/h)
+ Air heating options (electric heating or hot water coil)

SERVICES +

HYGRO CONTROL

INSTALLATION FACILE

	SIROCCO 55M Through-the-wall	SIROCCO 80M Through-the-wall	SIROCCO 110M Through-the-wall	SIROCCO 110T Through-the-wall
PRODUCT REFERENCE				
Standard model	W28SI55E	W28SI80E	W28SI110E	W28SI110ET
Model with electric heating option	W28SI55EE	W28SI80EE	W28SI110EE	W28SI110EET
	2 kW	3 kW	4,5 kW	4,5 kW
Model with hot water coil option	W28SI55EB	W28SI80EB	W28SI110EB	W28SI110EBT
	6 kW	9 kW	12 kW	12 kW

ACCESSORIES INCLUDED IN THE PACK

Hygro control box

TECHNICAL SPECIFICATIONS

Capacity (l/h)	2,3	3,3	4,6	
Absorbed power* (W)	990	1100	1340	
Operating power* (W)	2080	2310	2810	
Acoustic pressure at 5m (dB(A))**	45,7	44,7	44,2	
Air flow (m^3/h)	600	800	1000	
Electric power supply	230 V / 1 / 50 Hz			400 V / 3N / 50 Hz
Nominal operating intensity (A)***	4,45	5,05	6,35	2,8
Max. absorbed intensity (A)***	5,9	8	9,8	3,8
Refrigerant fluid	R407C			
Refrigerant fluid quantity (kg)	0,47	0,74	0,87	
Evacuation of condensate	Flexible tube Ø12/18			

* Standard unit, in the following nominal conditions: air 30°C, humidity 70%.
** Values measured and certified in compliance with EN ISO 3741 & EN ISO 354 standards, by CCTM (Centre de Transfert de Technologie du Mans) on standard units.
*** Excluding the power consumption of electric heating options.

HOT WATER COIL SPECIFICATIONS

	SIROCCO 55M Through-the-wall	SIROCCO 80M Through-the-wall	SIROCCO 110M Through-the-wall	SIROCCO 110T Through-the-wall
Power (kW) with primary at 90/70°C	6	9	12	12
Power (kW) with primary at 45/40°C	2,1	2,6	3,3	3,3
Water flow (m^3/h) with primary at 90/70°C	0,25	0,42	0,53	0,53
Load loss (mmCE) with primary 90/70°C	410	370	650	650
Connection (mm)	15 / 21 male thread			

INSTALLATION

- The Through-the-wall Sirocco is installed in the technical room adjacent to the pool hall.
- Only the extraction and the blower grates are visible from the pool hall.
- Heating in the technical room can be incorporated optionally: either by hot water coil, or via electrical resistance.
- Minimum Free-discharge operating temperature : +10°C.

SPARE PARTS Spare parts p.293

Installation of an appliance with the hot water coil option.

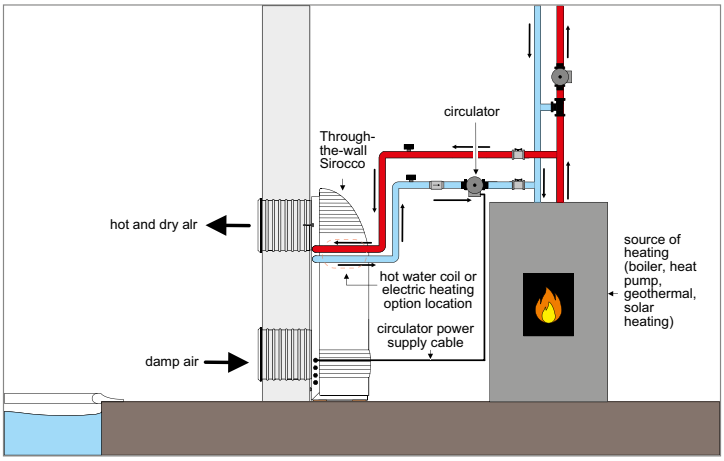

DIMENSIONS (MM) AND WEIGHT

	SIROCCO 55M Through-the-wall	SIROCCO 80M Through-the-wall	SIROCCO 110M Through-the-wall	SIROCCO 110T Through-the-wall
A	1030	1220	1410	
B	620	810	1000	
C : Anchor points	653	843	1033	
Space: Tolerance +2/-0 mm	618 x 165	808 x 165	998 x 165	
Number of grates	2 x 3	2 x 4	2 x 5	
Weight (kg) (basic model)	65	85	75	75

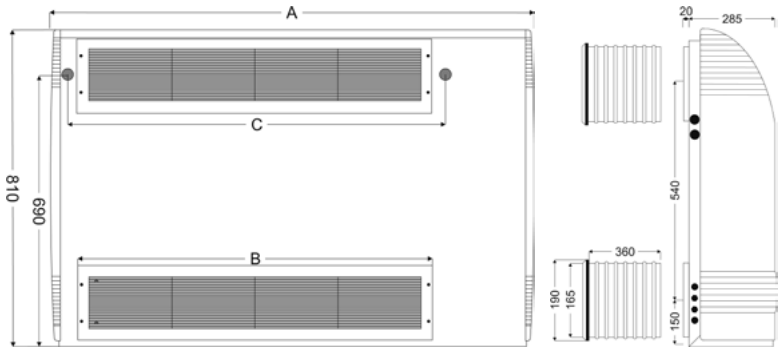

OPTIONAL ACCESSORIES

	Filter Sirocco 55M/55T Through-the-wall	Filter Sirocco 80M/80T Through-the-wall	Filter Sirocco 110M/110T Through-the-wall
reference	WSD01911	WSD01912	WSD01913

For the best operation of the dehumidifier we recommend changing the filter every year.

DF Through-the-wall Through-the-wall horizontal system

2 ANS GARANTIE

+ Hidden installation without ducts, for simplified project design
+ Available in 3 capacities (3.5 to 8 l/h)
+ Air heating options (electric heating or hot water coil)

INSTALLATION FACILE

HYGRO CONTROL

SERVICES +

	DF 403M Through-the-wall	DF 405M Through-the-wall	DF 405T Through-the-wall	DF 408M Through-the-wall	DF 408T Through-the-wall
PRODUCT REFERENCE					
Standard model	W28DF403ME	W28DF405ME	W28DF405TE	W28DF408ME	W28DF408TE
Model with electric heating option	W28DF403MEE	W28DF405MEE	W28DF405TEE	W28DF408MEE	W28DF408TEE
	4,5 kW	4,5 kW	4,5 kW	4,5 kW	9 kW
Model with hot water coil option	W28DF403MEB	W28DF405MEB	W28DF405TEB	W28DF408MEB	W28DF408TEB
	12kW	12kW	12kW	14 kW	14 kW

ACCESSORIES INCLUDED IN THE PACK

Hygro control box

TECHNICAL SPECIFICATIONS

Capacity (l/h)	3,5	5		8	
Absorbed power* (W)	1500	1860		2600	
Operating power* (W)	3600	4465		6240	
Air flow (m^3/h)	1300			1700	
Electric power supply	230 V / 1 / 50 Hz		400 V / 3N / 50 Hz	230 V / 1 / 50 Hz	400 V / 3N / 50 Hz
Max. absorbed intensity (A)**	13,2	16,1	7,3	24,8	9,5
Refrigerant fluid	R407C				
Refrigerant fluid quantity (kg)	1,18	1,21		1,52	

For all DF orders a deposit of 30% will be requested with the order.
* Standard unit, in the following nominal conditions: air 30°C, humidity 70%.
** Excluding the power consumption of electric heating options.

OPTIONAL ACCESSORIES

	Double deflector supply grade	Register + double deflector grade	Chassis support DF	Remote control electrical unit
reference	WTT02365	WTT02369	WTO04000	W28DEPORT

HOT WATER COIL SPECIFICATIONS

	DF 403M Through-the-wall	DF 405M Through-the-wall	DF 405T Through-the-wall	DF 408M Through-the-wall	DF 408T Through-the-wall
Power (kW) with primary 50-40 °C/90-70°C	4,6/14,6			5,5/17,6	
Water flow (m^3/h) with primary at 90/70°C	0,65			0,78	
Load loss (mmCE) with primary 90/70°C	55			78	
Connection (mm)	20 / 27 male thread				

INSTALLATION

- Installation in a technical room nearby the pool hall.
- Blower and intake grates mounted on the part to be mortared included with the appliance.
- Possibility of double deflector grates to direct the hot dry air towards the windows.
- Hot water coil assembled inside the appliance (option).
- Extra electric heating using incorporated electric heating elements (option).
- Filter on the intake.
- Reversible installation: right-hand (standard) or left-hand (optional) access to the technical door.

SPARE PARTS Spare parts p.294

Installation of an appliance with the hot water coil option.

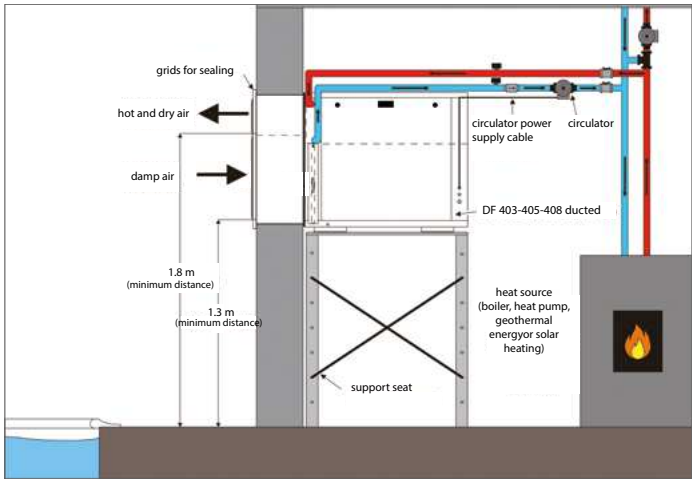

DIMENSIONS (MM) AND WEIGHT

	DF 403M Through-the-wall	DF 405M Through-the-wall	DF 405T Through-the-wall	DF 408M Through-the-wall	DF 408T Through-the-wall
Weight (kg) (basic model)	129	130	130	133	133

DF

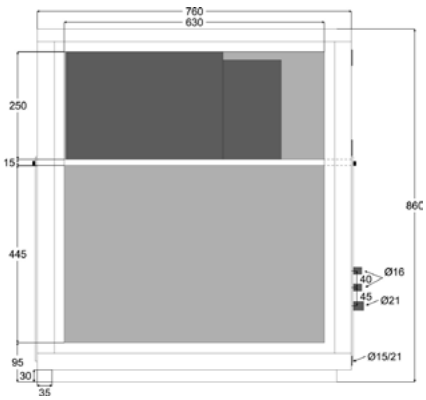

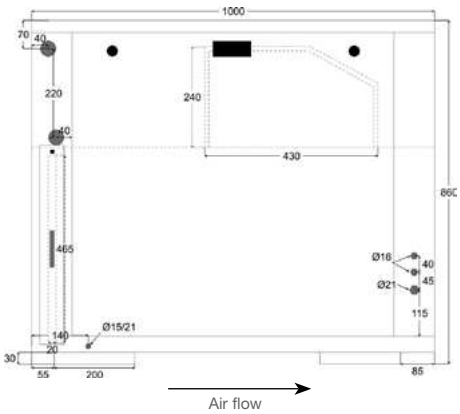

Access panel as standard for electrical connections

Grate to be mortared

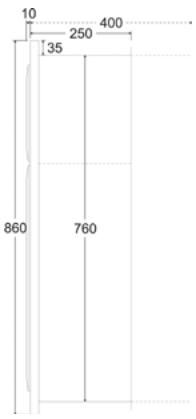

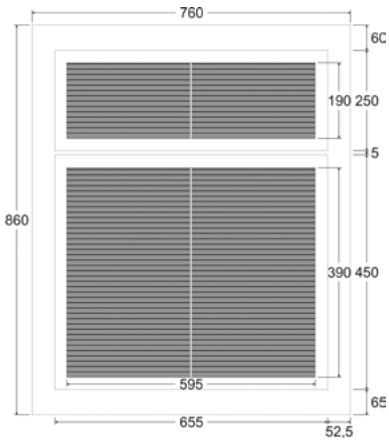

DF ducted 403 - 408 Horizontal ducted system

2 ANS GARANTIE

+ Horizontal, ducted installation
+ Available in 5 capacities (3.5 to 12l/h)
+ Air heating options (electric heating or hot water coil)

HYGRO CONTROL

SERVICES +

	DF 403M ducted	DF 405M ducted	DF 405T ducted	DF 408M ducted	DF 408T ducted
PRODUCT REFERENCE					
Standard model	W28DF403MG	W28DF405MG	W28DF405TG	W28DF408MG	W28DF408TG
Model with electric heating option	W28DF403MGE	W28DF405MGE	W28DF405TGE	W28DF408MGE	W28DF408TGE
	4,5 kW	4,5 kW	4,5 kW	4,5 kW	9 kW
Model with hot water coil option	W28DF403MGB	W28DF405MGB	W28DF405TGB	W28DF408MGB	W28DF408TGB
	15 KW	15 KW	15 KW	18kW	18kW

ACCESSORIES INCLUDED IN THE PACK

Hygro control box

TECHNICAL SPECIFICATIONS

Capacity (l/h)	3,5	5		8	
Absorbed power* (W)	1500	1860		2600	
Operating power* (W)	3600	4465		6240	
Sound power (dB(A))**	71,5			73,6	
Air flow (m^3/h)	1300			1700	
Available pressure (mmCE)	10				
Electric power supply	230 V / 1 / 50 Hz		400 V / 3N / 50 Hz	230 V / 1 / 50 Hz	400 V / 3N / 50 Hz
Max. absorbed intensity (A)***	13,2	16,1	7,3	24,8	9,5
Refrigerant fluid	R407C				
Refrigerant fluid quantity (kg)	1,18	1,21		1,52	
Evacuation of condensation	PVC Ø 32 1/2 union to glue				

For all DF orders a deposit of 30% will be requested with the order.
* Standard unit, in the following nominal conditions: air 30°C, humidity 70%.
** Values measured and certified in compliance with EN ISO 3741 & EN ISO 354 standards, by CCTM (Centre de Transfert de Technologie du Mans) on standard units.
*** Excluding the power consumption of electric heating option.

HOT WATER COIL SPECIFICATIONS

	DF 403M ducted	DF 405M ducted	DF 405T ducted	DF 408M ducted	DF 408T ducted
Power (kW) with primary 50-40 °C/90-70°C	4,6/14,6			5,5/17,6	
Water flow (m³/h) with primary at 90/70°C	0,65			0,78	
Load loss (mmCE) with primary 90/70°C	55			78	
Connection (mm)	20 / 27 male thread				

INSTALLATION

- Installation in a technical room nearby the pool hall.
- Blower and intake grates mounted on the part to be mortared included with the appliance.
- Duct diameter: Ø 315 mini or 400 x 200.
- Possibility of double deflector grates to direct the hot dry air towards the windows.
- Reversible installation: right-hand (standard) or left-hand (optional) access to the technical door.
- Hot water coil and electric heating options are integrated outside the air outlet which adds a thickness to the installation. It is highly recommended to integrate these options during first installation.
- Added thickness:
  For electric heating option
  DF403– 408 : 145mm
  For hot water coil option
  DF403 – 408 : 90mm

SPARE PARTS Spare parts p.294

Installation of an appliance with the hot water coil option (models 403 to 412).

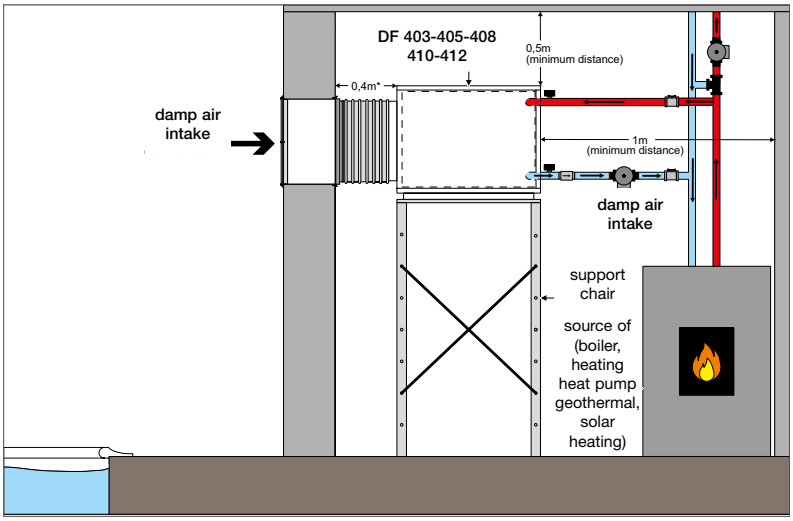

DIMENSIONS (MM) AND WEIGHT

	DF 403M ducted	DF 405M ducted	DF 405T ducted	DF 408M ducted	DF 408T ducted
Weight (kg)	113	113	113	117	117

Access panel as standard for electrical connections

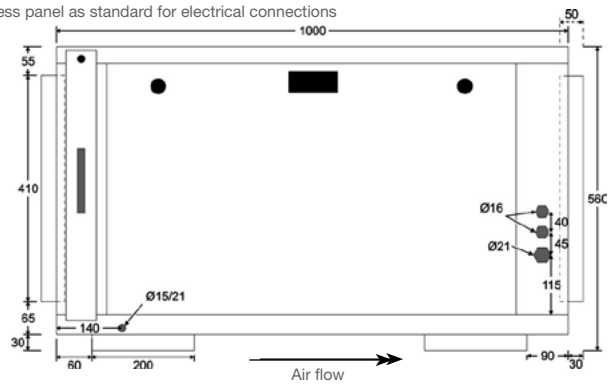

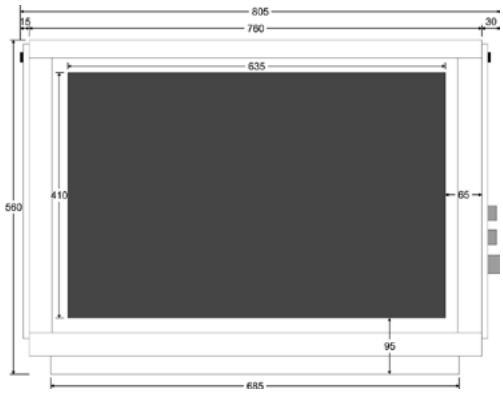

OPTIONAL ACCESSORIES

	1 Double deflector supply grade	2 Vertical angle 90°	3 Outlet DF Ø 315	3 Outlet DF Ø 400	4 Standard outlet 625 x 425	Circular sound trap with core Ø 315	5 Sound trap rectangular length 500 mm	DF Chassis support	Remote control electrical unit
reference	WCH03716	WCH03717	WCH03715	WCH03729	WTT02355	WCH03681	WCH03718	WTO04000	W28DEPORT

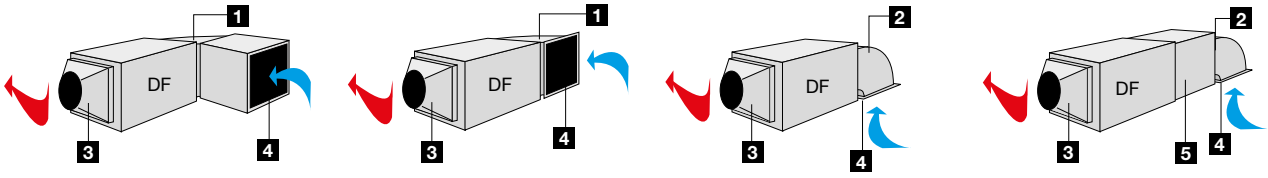

DF ducted 410 - 412 Horizontal ducted system

2 ANS GARANTIE

+ Horizontal, ducted installation
+ Available in 5 capacities (3.5 to 12 l/h)
+ Air heating options (electric heating or hot water coil)
+ Titanium water condenser option, enabling to re-use the excess heat to warm the pool

HYGRO CONTROL

SERVICES +

	DF 410M ducted	DF 410T ducted	DF 412T ducted****
PRODUCT REFERENCE	PRODUCT REFERENCE	PRODUCT REFERENCE	PRODUCT REFERENCE
Standard model	W28DF410MG	W28DF410G	W28DF412G
Model with water condenser option	W28DF410MGC	W28DF410GC	W28DF412GC
Model with electric heating option	W28DF410MGE	W28DF410GE	W28DF412GE
	4,5 kW	9 kW	9 kW
Model with electric heating option and water condenser	W28DF410MGEC	W28DF410GEC	W28DF412GEC
	4,5 kW	9 kW	9 kW
Model with hot water coil option	W28DF410MGB	W28DF410GB	W28DF412GB
	23 kW	23 kW	23 kW
Model with hot water coil option and water condenser	W28DF410MGBC	W28DF410GBC	W28DF412GBC
	23 kW	23 kW	23 kW

ACCESSORIES INCLUDED IN THE PACK

Hygro control box

TECHNICAL SPECIFICATIONS

Capacity (l/h)	10		12
Absorbed power* (W)	3470		4170
Operating power* (W)	7630		9180
Acoustic power (dB(A))**	-		76,7
Air flow (m^3/h)	2000		
Available pressure (mmCE)	10		
Electric power supply	230 V / 1N / 50 Hz	400 V / 3N / 50 Hz	
Max. absorbed intensity (A)***	20,5	11,9	14
Refrigerant fluid quantity (kg)	2,7 /2,82 (1)		2,9 /3,82 (1)
Evacuation of condensation	PVC Ø 32 1/2 union to glue		

For all DF orders a deposit of 30% will be requested with the order.
* Standard unit, in the following nominal conditions: air 30°C, humidity 70%.
** Values measured and certified in compliance with EN ISO 3741 & EN ISO 354 standards, by CCTM (Centre de Transfert de Technologie du Mans) on standard units.
*** excluding the power consumption of electric heating option.
**** DF412 in single phase on request.
(1) for units with water condenser option.

HOT WATER COIL SPECIFICATIONS

	DF 410M ducted	DF 410T ducted	DF 412T ducted
Power (kW) with primary at 90/70°C	23		
Power (kW) with primary at 45/40°C	7		
Water flow (m³/h) with primary at 90/70°C	1,1		
Load loss (mmCE) with primary 90/70°C	204		
Connection (mm)	20 / 27 male thread		

INSTALLATION

- Installation in a technical room nearby the pool hall.
- Available pressure 10 mmCE making it possible to install a duct network to carry hot, dry air the length of the window bays.
- Duct diameter: Ø 400 mini or 400 x 300.
- Reversible installation: right-hand (standard) or left-hand (optional) access to the technical door.
- Hot water coil and electric heating options are integrated outside the air outlet which adds a thickness to the installation. It is highly recommended to integrate these options during first installation.
- Added thickness:
  For electric heating option
  DF410 – 412 : 125mm
  For hot water coil option
  DF410 – 412 : 125mm

SPARE PARTS Spare parts p.294

Installation of an appliance with the condenser option (models 410 G and 412 G only).

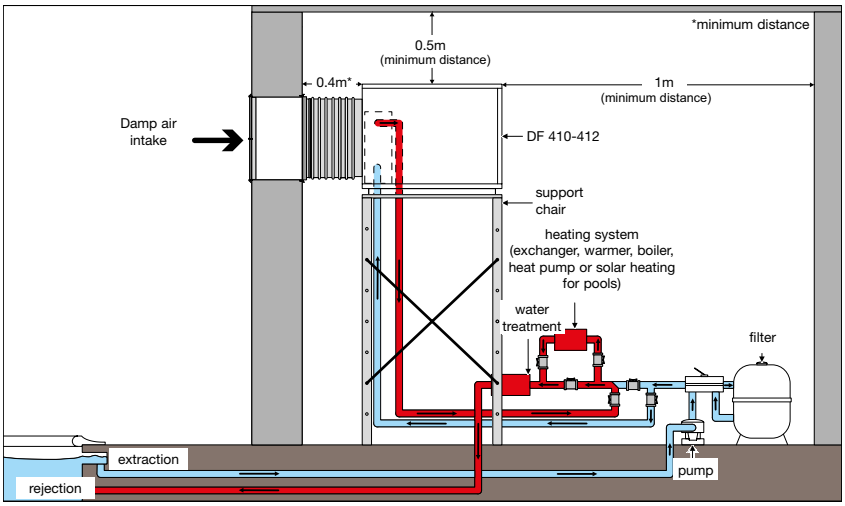

DIMENSIONS (MM) AND WEIGHT

	DF 410M ducted	DF 410T ducted	DF 412T ducted
Weight (kg) (basic model)	147	147	149

Access panel as standard for electrical connections

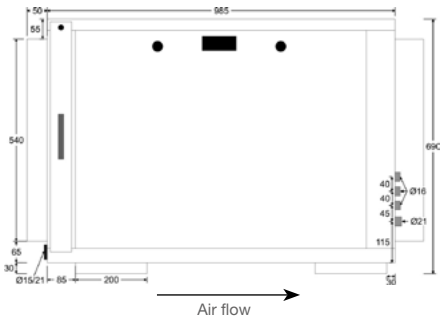

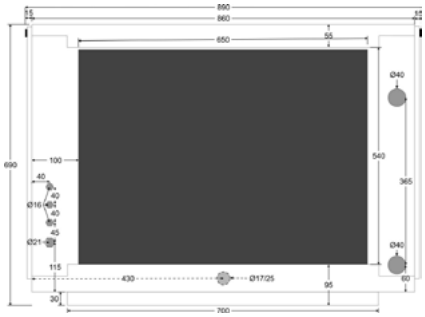

OPTIONAL ACCESSORIES

	1 Horizontal angle 90°	2 Vertical angle 90°	3 Outlet DF Ø 400	4 Standard outlet 625 x 425	5 Sound trap rectangular length 635 x 525 long. 500 mm	DF Chassis support	Remote control electrical unit
reference	WCH03698	WCH03699	WCH03700	WTT02355	WCH03709	WTO04000	W28DEPORT

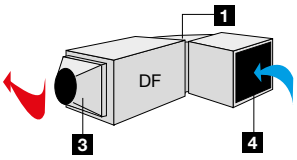

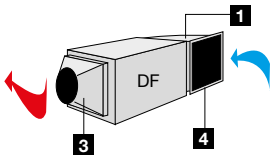

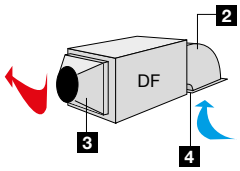

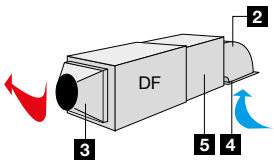

CAE

Dehumidification > CAE - Vertical ducted unit

2 ANS GARANTIE

+ Vertical, ducted installation with modular air intake/outlet configurations
+ Available in 4 capacities (8 to 13.5 l/h)
+ Air heating options (electrical heating or hot water coil)
+ Titanium water condenser option, enabling to re-use the excess heat to warm the pool

HYGRO CONTROL

SERVICES +

	CAE 508M ducted****	CAE 508T ducted****	CAE 510T ducted****		CAE 513T ducted****	
PRODUCT REFERENCE						
Standard model	W28CAE8M	W28CAE8	W28CAE10		W28CAE13	
Model with water condenser option	W28CAE8MC	W28CAE8C	W28CAE10C		W28CAE13C	
Model with air heating option using electric heaters	W28CAE8ME	W28CAE8E	W28CAE10E9	W28CAE10E18	W28CAE13E9	W28CAE13E18
	4,5 kW	9 kW	9 kW	18 kW	9 kW	18 kW
Model with air heating option using electric heaterset condenser	W28CAE8MEC	W28CAE8EC	W28CAE10E9C	W28CA10E18C	W28CAE13E9C	W28CA13E18C
	4,5 kW	9 kW	9 kW	18 kW	9 kW	18 kW
Model with air heating option using hot water coil	W28CAE8MB	W28CAE8B	W28CAE10B		W28CAE13B	
	23 kW	23 kW	35 kW		41 kW	
Model with air heating option using hot water coil and condenser	W28CAE8MBC	W28CAE8BC	W28CAE10BC		W28CAE13BC	
	23 kW	23 kW	35 kW		41 kW	

ACCESSORIES INCLUDED IN THE PACK

Hygro control box

TECHNICAL SPECIFICATIONS

Capacity (l/h)	8		10	13,5
Absorbed power* (W)	2710		4040	5430
Operating power* (W)	6500		9695	13030
Acoustic power (dB(A)) **	-	77,6	-	77,6
Nominal operating power (A)***	17,5	5,3	8,5	11
Nominal airflow (m^3/h)	2040		2720	3400
Air flow (m^3/h)	2400		3050	3800
Min. air flow (m^3/h)	1780		2380	2970
Available pressure (mmCE)	15		19	23
Electric power supply	230 V / 1 / 50 Hz	400 V / 3N / 50 Hz		
Max. absorbed intensity (A)***	37,1	8	14,5	17
Refrigerant fluid quantity (kg)	1,3/1,45 (1)		2,2/2,5 (1)	

For all CAE orders a deposit of 30% will be requested with the order.
* Standard unit, in the following nominal conditions: air 30°C, humidity 70%.
** Values measured and certified in compliance with EN ISO 3741 & EN ISO 354 standards, by CCTM (Centre de Transfert de Technologie du Mans) on standard units.
*** excluding the power consumption of electric heating option.
**** An annual check of the sealing of the refrigerating circuit must be carried out for all refrigerating equipment with a load in refrigerating fluid >2 kg and < 30 kg (cf. Art 3 7/05/05 regulation, French decree n° 737-2007).
CAE 510 single phase on request.
(1) for units with water condenser option.

HOT WATER COIL SPECIFICATIONS

	CAE 508M ducted	CAE 508T ducted	CAE 510T ducted	CAE 513T ducted
Power (kW) with primary at 90/70°C	23		35	41
Power (kW) with primary at 45/40°C	5,9		9,8	11,6
Water flow (m^3/h) with primary at 90/70°C	1		1,6	1,9
Load loss (mmCE) with primary 90/70°C	1250		1900	2500
Connection (mm)	20 / 27 male thread			

EXTRACTION AND BLOWER OPTIONS

- Installation of an appliance with the TITANIUM water condenser option.
- Damp air intake: the standard intake is installed in the lower part at the rear of the CAE. Optionally, the intake can be installed in the lower part on the left or right hand sides of the CAE.
- Dry air blower: the standard dry air blower is installed in the upper part on the top of the CAE. Optionally the blower can be installed on the top part on the front or rear face of the CAE.

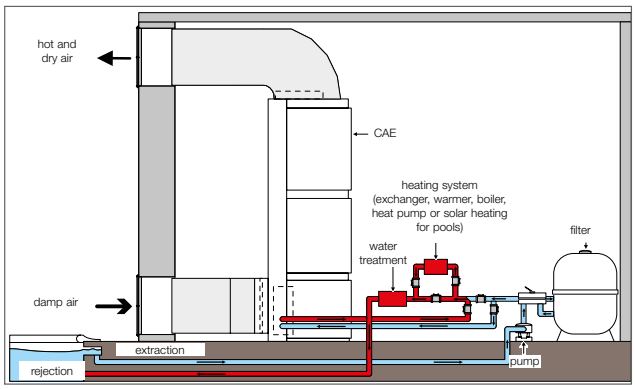

SPARE PARTS Spare parts p.296

EXTRACTION AND SUPPLY

Extractor on the left (frame + filter)	1	W28REGA
Extractor on the right (frame + filter)	2	W28REDR
Rear blower (frame)	3	W28SOAR
Front blower (frame)	4	W28SOAV

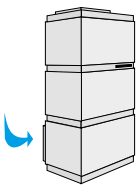
Rear extraction outlet

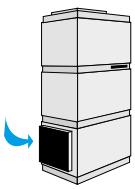
1 Side extraction outlet

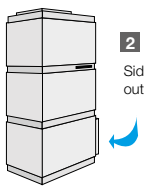
2 Side extraction outlet

Top blower outlet

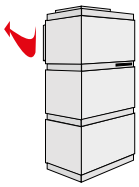
3 Rear blower outlet

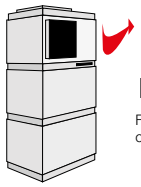
4 Front blower outlet

CAE

	CAE 508M ducted****	CAE 508T ducted****	CAE 510T ducted****	CAE 513T ducted****
AIR EXTRACTION AND SUPPLY ACCESSORIES				
Diameter	Ø 400		Ø 500	
Circular rear extraction accessories (1) 1	WCH01245		WCH01246	
Circular side extraction accessories (1) 2	WCH01247		WCH01248	
Circular top extraction accessories (2) 3	WCH01249		WCH01250	
Circular front/rear blower accessories (1) 4	WCH01249		WCH01250	

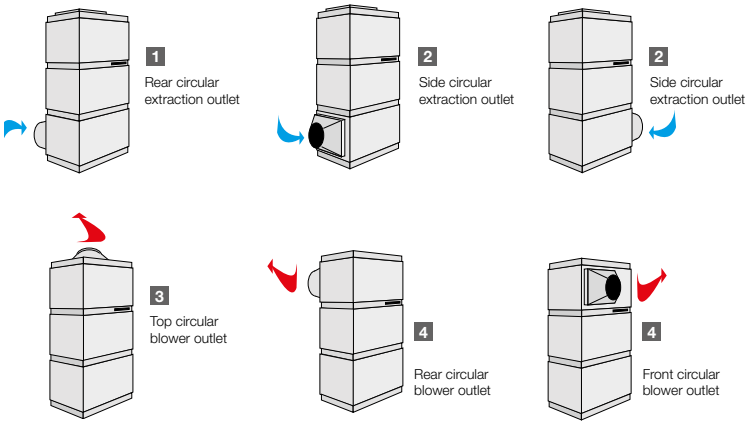

(1) Plan the left or right option
(2) Plan the front or rear blower option. For other metalwork, contact us

EXTRACTION AND SUPPLY BOX		
Diameter	Ø 400	Ø 500
Circular angled outlet	WCH01251	WCH01252
System central intake box	WCH01253	WCH01254
Intake box for 625 x 425 grate	WCH03719	Contact us

Other accessories or casing: contact us

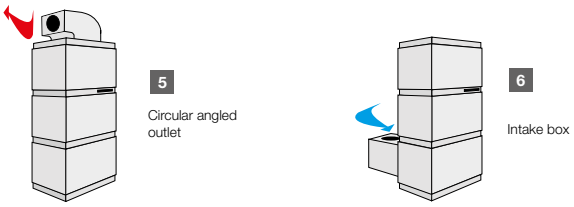

SOUND TRAP		
Diameter	Ø 400	Ø 500
Sound trap	WCH03682	WCH03683

Circular sound trap with Ø 400 central core for CAE 508 et Ø 500 core for CAE 510, 513. Can be mounted on the intake or blower side.

****An annual check of the sealing of the refrigerating circuit must be carried out for all refrigerating equipment with a load in refrigerating fluid >2 kg and < 30 kg (cf. Art 3 7/05/05 regulation, French decree n° 737-2007).
CAE 510 single phase on request.
(1) for units with water condenser option

OPTIONAL ACCESSORIES						
	625 x 425 grate (plan for 2 grates)	Double 625 x 425 deflector (blower)	Sound trap	Blower angle	Remote regulator box for the dehu-midifier	Remote regulator box for 2 dehumi-difiers
reference	WTT02355	WTT02366	WCH01234	WCH01255	R0771000	R0771100

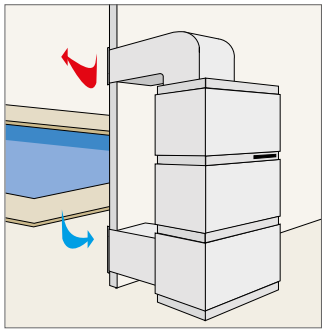

CAE TECHNICAL ROOM + DUCTS

- Installation of an appliance with the TITANIUM water condenser option.
- Damp air intake: the standard intake is installed in the lower part at the rear of the CAE. Optionally, the intake can be installed in the lower part on the left or right hand sides of the CAE.
- Dry air blower: the standard dry air blower is installed in the upper part on the top of the CAE. Optionally the blower can be installed on the top part on the front or rear face of the CAE.

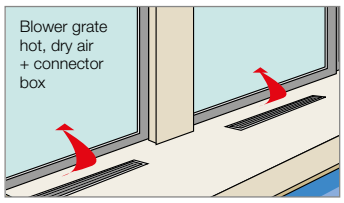

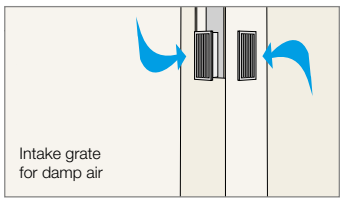

DIMENSIONS (MM) AND WEIGHT

	CAE 508M ducted	CAE 508T ducted	CAE 510T ducted	CAE 513T ducted
Weight (kg)	228	228	235	240

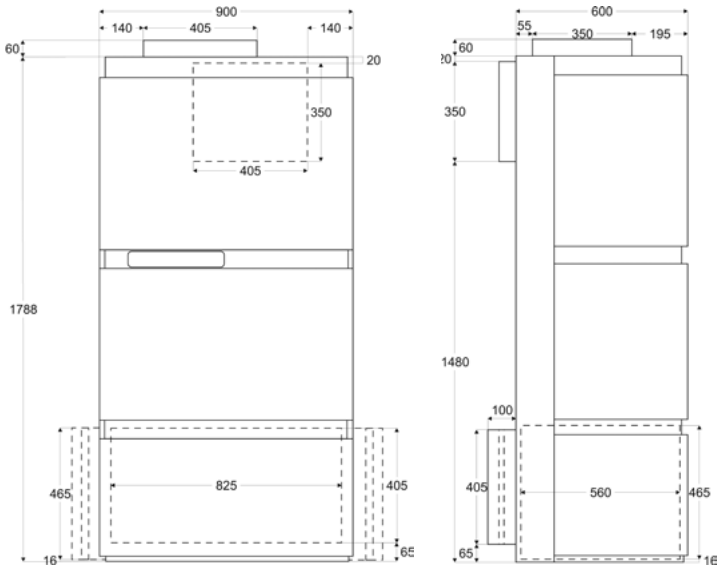

OMEGA Central unit

2 ANS GARANTIE

+ Vertical, ducted installation with modular air intake/outlet configurations
+ Available in 5 capacities (10 to 28 l/h)
+ Air heating options (electrical heating or hot water coil)
+ Titanium water condenser option, enabling to re-use the excess heat to warm the pool

HYGRO CONTROL

SERVICES +

	OMEGA 10T ducted	OMEGA 14T ducted	OMEGA 16T ducted	OMEGA 20T ducted	OMEGA 28T ducted
PRODUCT REFERENCE					
Standard model	W28OM10	W28OM14	W28OM16	W28OM20	W28OM28
Model with water condenser option	W28OM10C	W28OM14C	W28OM16C	W28OM20C	W28OM28C
Model with air heating option using electric heaters	W28OM10E	W28OM14E	W28OM16E	W28OM20E	W28OM28E
	9 kW	9 kW	18 kW	18 kW	18 kW
Model with air heating option using electric heaters and condenser	W28OM10EC	W28OM14EC	W28OM16EC	W28OM20EC	W28OM28EC
	9 kW	9 kW	18 kW	18 kW	18 kW
Model with air heating option using hot water coil	W28OM10B	W28OM14B	W28OM16B	W28OM20B	W28OM28B
	24 kW	34 kW	42 kW	53 kW	76 kW
Model with air heating option using hot water coil and condenser	W28OM10BC	W28OM14BC	W28OM16BC	W28OM20BC	W28OM28BC
	24 kW	34 kW	42 kW	53 kW	76 kW

ACCESSORIES INCLUDED IN THE PACK

Hygro control box

	OMEGA 10T ducted****	OMEGA 14T ducted****	OMEGA 16T ducted****	OMEGA 20T ducted****	OMEGA 28T ducted****
TECHNICAL SPECIFICATIONS					
Capacity (l/h)	10	14	16	20	28
Absorbed power* (W)	3 840	4 390	5 830	6 430	9 900
Operating power* (W)	9 210	10 530	13 990	15 430	23 760
Acoustic power (dB(A)) **	-	83,6	-	82	-
Air flow (m^3/h)	3 000	4 000	5 000	6 000	8 500
Available pressure (mmCE)	20				
Electric power supply	400 V / 3N / 50 Hz				
Absorbed intensity (A)	7,6	9	12	16,4	19
Max. absorbed intensity (A)***	13	16	18,5	20,1	23,8
Refrigerant fluid	R407C				
Refrigerant fluid quantity (kg)	3,5/3,8 (1)		3,5/3,9 (1)	3,5/3,8 (1)	8,2/8,5 (1)

For all OMEGA orders a deposit of 30% will be requested with the order.
* Standard unit, in the following nominal conditions: air 30°C, humidity 70%.
** Values measured and certified in compliance with EN ISO 3741 & EN ISO 354 standards, by CCTM (Centre de Transfert de Technologie du Mans) on standard units.
*** excluding the power consumption of electric heating option.
**** An annual check of the sealing of the refrigerating circuit must be carried out for all refrigerating equipment with a load in refrigerating fluid >2 kg and < 30 kg (cf. Art 3 7/05/05 regulation, French decree n° 737-2007).
(1) for units with water condenser option.

HOT WATER COIL SPECIFICATIONS					
Power (kW) with primary at 90/70°C	24	34	42	53	76
Power (kW) with primary at 45/40°C	9,5	11,6	13,6	15,2	23
Water flow (m^3/h) with primary at 90/70°C	1,66	2,03	2,35	2,64	3,98
Load loss (mmCE) with primary 90/70°C	930	1340	1760	2170	1410
Connection (mm)	20 / 27 male thread				

DIMENSIONS (MM) AND WEIGHT					
	OMEGA 10T ducted	OMEGA 14T ducted	OMEGA 16T ducted	OMEGA 20T ducted	OMEGA 28T ducted
Weight (kg)	342	344	346	397	505

	Oméga 10 to 20	Oméga 28
A	1940	2170
B	1150	1734
C	625	652
D	70	102
E	445	413
F	410	908
G	295	413
H	240	190
I	345	387
J	75	240
K	225	216
L	655	673
M	630	824
N	60	50
O	20	0
Extractor Width	1060	1650

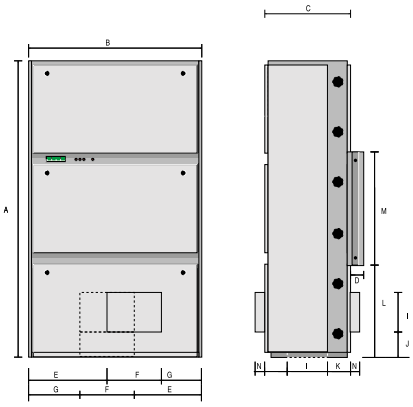

Blower at the bottom

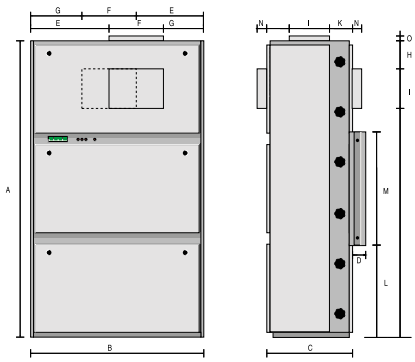

Blower at the top

Spare parts p.298

OMEGA Central unit

		OMEGA 10T ducted	OMEGA 14T ducted	OMEGA 16T ducted	OMEGA 20T ducted	OMEGA 28T ducted
BLOWER OPTIONS						
Blower on the top	1	W28SODE			W28SODE20	W28SODE28
Blower on the top to the front	2	W28SOHAV			W28SOHAV20	W28SOHAV28
Blower on the top to the rear	3	W28SOHAR			W28SOHAR20	W28SOHAR28
Blower on the bottom to the front	4	W28SOBAV				
Blower on the bottom to the rear	5	W28SOBAR				

The standard blower on the OMEGA systems is installed under the system (blower inversed compared to the CEA). Optionally, blower can be installed on the top or bottom and either to the front of the rear.

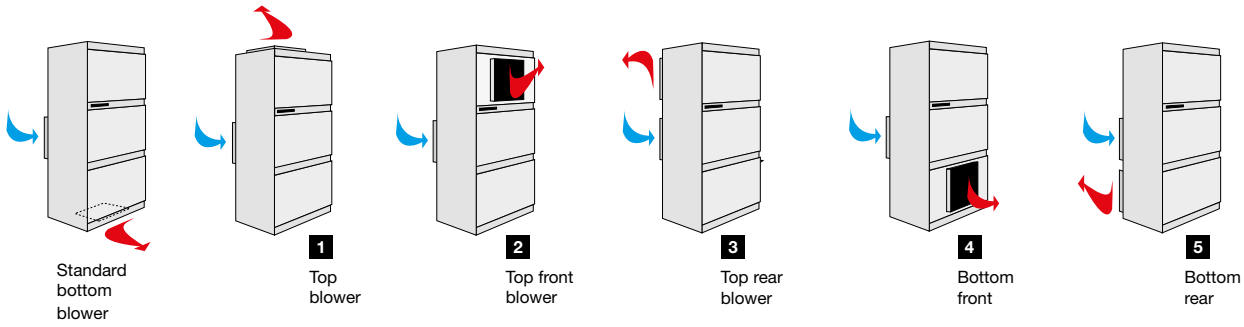

			OMEGA 10T ducted	OMEGA 14T ducted	OMEGA 16T ducted	OMEGA 20T ducted	OMEGA 28T ducted
OMEGA INTAKE							
Extractor grate 1000 x 600 (4000 à 6000 m³/h) with counter frame		Grate	WFA01477				
		Counter frame	WFA01479				
Sound trap 600 mm (for direct intake from 100 X 600 grate)	1		WCH01236				
Extraction box for Omega systems	2	Caisson	WCH02822		WCH03048		WCH03049
		Diameter	Ø500		Ø630		Ø500
Intake box for 1000 x 600 grate		Caisson	WCH02822		WCH03048		WCH03049
		Diameter	Ø500		Ø630		Ø500

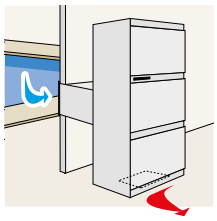

1 Grate + Sound trap

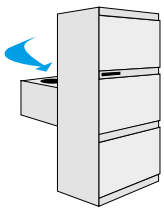

2 Extractor box

	OMEGA 10T ducted	OMEGA 14T ducted	OMEGA 16T ducted	OMEGA 20T ducted	OMEGA 28T ducted
EXTRACTION AND SUPPLY ACCESSORIES					
Diameter	Ø500		Ø630		2 x Ø500
Rear circular extractor accessories 3	WCH03701		WCH03702		WCH03703
Front/rear circular blower accessories 4	WCH03595		WCH03331		WCH03704
Upper circular blower accessories 5	WCH03705		WCH03706		WCH03707

Other accessories or casing: contact us.

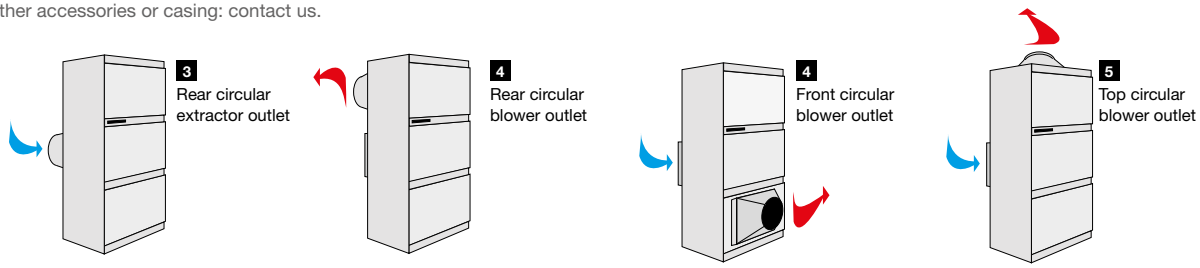

OPTIONAL ACCESSORIES

	Filters for OMEGA 10, 14, 16 et 20 tri	Filters for OMEGA 28 tri	Remote regulator box for the dehumidifier	Remote regulator box for 2 dehumidifiers
reference	WSD01916	WSD03350	R0771000	R0771100

INSTALLATION

- Installation in a technical room nearby the pool hall.
- Damp air extractor frame on the rear face for connection to wall or ceiling extractor duct.
- Hot, dry air blower either under or over the system for direct assembly on buried ducts or ceiling service area ducts.
- Simplified aeraulic assembly with very little load loss making it possible to keep the available ventilator pressure for the duct network.
- Hot water coil or extra electric heating fitted inside the system (see options).
- A remote regulator box, temperature sensor and humidity sensor in a duct and box enable you to adjust the operation of one unit or two dehumidifier units.

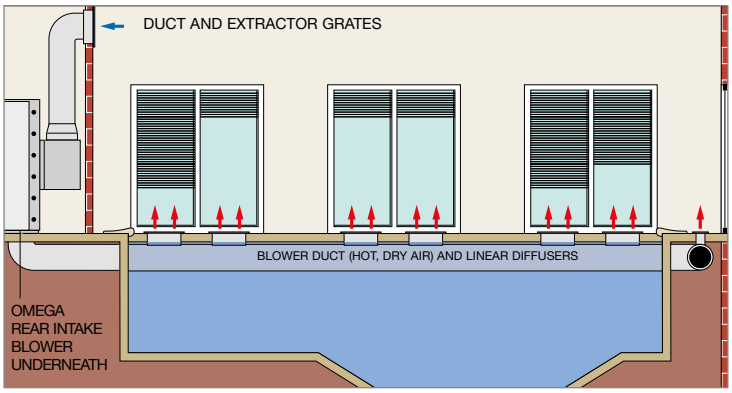

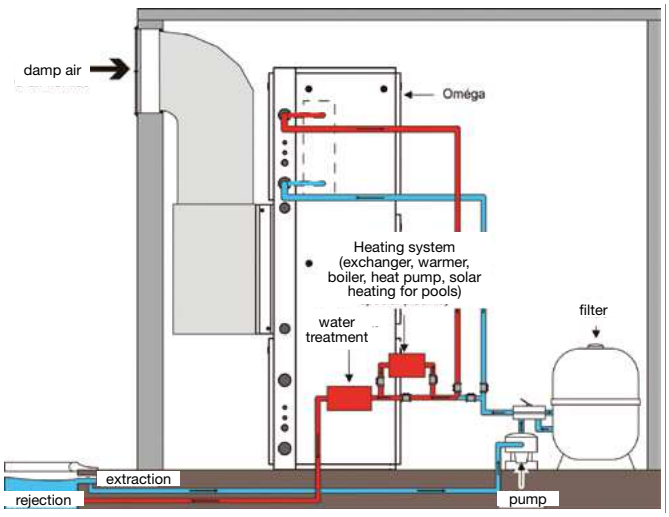

ENERGY Fan

2 ANS GARANTIE

+ Air renewal: better pool hall hygiene
+ Wall-mounted fan with backdraft damper
+ Aesthetic finish and silent working

INSTALLATION FACILE

	ENERGY 150 FAN	ENERGY 500 FAN	ENERGY 900 FAN	ENERGY 1800 FAN
PRODUCT REFERENCE				
Standard model	WD001208	WD001209	WD001210	WD001211

ACCESSORIES INCLUDED IN THE PACK

Through-the-wall duct	Outdoor grade

EQUIPMENT

- Provide a fresh air supply grille (supply airflow lower or equal to the fan's extraction airflow to guarantee a slight underpressure in the pool hall.
- Axial fan
- Construction in ABS
- 150 Model : 1 speed extract fan, control with switch or servo control (cord included)
- 500, 900 and 1800 Models : variable speed, start only with RC4M control bax (sold as accessory)

TECHNICAL SPECIFICATIONS

Max. extraction airflow	280	445	918	1820
Eco extraction airflow	-	245	820	1341
Max. absorbed power	33	38	50	100
Eco absorbed power	-	20	37	70
Max. sound pressure at 3 m	43	45	49	51
Eco sound pressure at 3 m	-	27	46	45
Electric power supply	230 V / 1 / 50 Hz	230 V / 1 / 50 Hz	230 V / 1 / 50 Hz	230 V / 1 / 50 Hz

DIMENSIONS (MM) AND WEIGHT

Weight (kg)	0,99	4,6	4,9	9,5
A x B	200 x 200	269 x 272	342 x 342	420 x 420
C	100	134,5	171	206,5
D	100	737,5	175	214,5
E	200	269	337	413
F	114,5	128	130	169,4
Wall opening	Ø160	260 x 260	330 x 330	410 x 410
Wall width (min/max)	100/375	200/380	200/380	200/380

OPTIONAL ACCESSORIES

	RC4M control box for Energy 500, 900 and 1800 Box to control up to 5 fans
reference	WD001212

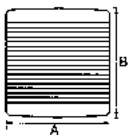

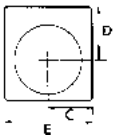

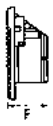

CANAL FAST Fan

2 ANS GARANTIE

+ Air renewal: swimming pool hygiene maintained
+ Centrifugal fan motor in duct
+ Easy to install with quick-fix system

INSTALLATION FACILE

	CANAL FAST 125	CANAL FAST 160	CANAL FAST 200	CANAL FAST 250
PRODUCT REFERENCE				
Standard model	WFA03484	WFA03485	WFA03486	WFA03487

EQUIPMENT

- Use a fresh air inlet (fresh air flow less than or equal to the ventilator flow rate) to slightly reduce pressure in the pool room
- Install horizontally or vertically at all points along the duct
- Housing: polypropylene body and flanges - IPX4 protection
- Turbine: centrifugal reaction, ABS helix, mounted directly onto the body of the engine, polypropylene fl anges - IPX4 protection
- External 2-speed rotary engine, IPX4
- Built-in mounting system with locking collars

TECHNICAL SPECIFICATIONS				
Max. extraction airflow	285/345	467/552	830/1040	1100/1400
Power (W)	47/65	54/76	90/125	125/177
Max. sound pressure at 3 m	31 / 42	33 / 44	45 / 52	47 / 55
Electric power supply	230 V / 1 / 50Hz	230 V / 1 / 50Hz	230 V / 1 / 50Hz	230 V / 1 / 50Hz
DIMENSIONS (MM) AND WEIGHT				
Weight (kg)	3	3,4	6,5	7,5
D	123	158	197	247
D1	185	185	209	256
H	250	250	261	320
B	220	220	239	286
L	295	295	296	393

OPTIONAL ACCESSORIES	
	Variable speed drive
reference	WFA03488

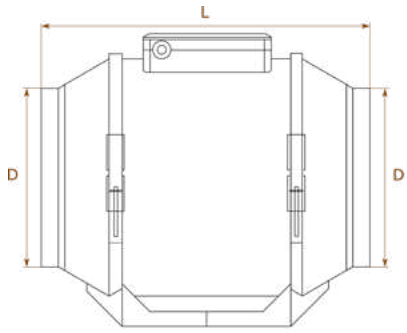

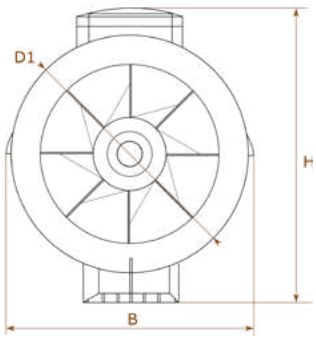

Floor slot diffusers

+ Attractive and discreet design : perfect integration flush with the level of the floor
+ Ideal air supply distribution : solution specially adapted for bay windows (air supply along the bay window)
+ New products, new heights, and new kits to make installation easier

Minimum manufacturing time : 3 weeks

Height (mm)	S08-1	S10-1	S12-1	S16-2	S20-2	S24-2	S30-3
100-150	WD001422	WD001424	WD001426	WD001429	WD001431	WD001433	WD001435
150-200	WD001423	WD001425	WD001427	WD001430	WD001432	WD001434	WD001436

*The height corresponds to that between the concrete slab and the finished level. It must not be less than 10 cm.

Floor slot diffusers can be cut straight across or at a 45° angle to the desired length (within dimension limits).
Floor slot diffusers are provided with any Zodiac dehumidifier unit order.
Contact our Design Office (BE@zodiac.com) for design and quotation.

TECHNICAL SPECIFICATIONS

The slot diffuser selection (number of slots) depends on the airflow and on the length of the diffuser.

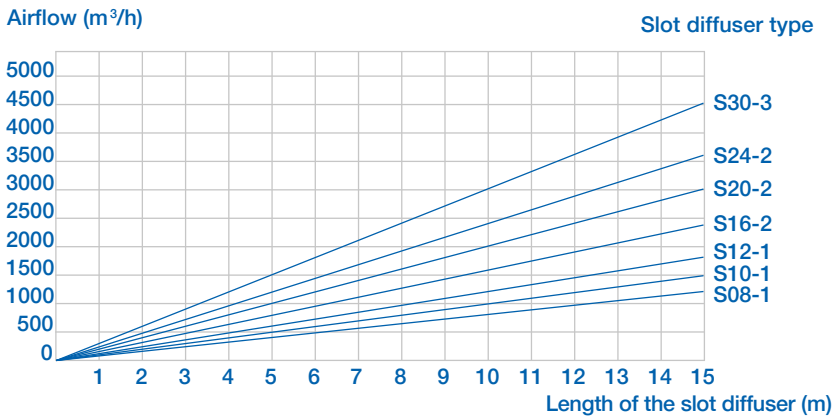

Type and quantity of tapping to order for each metre of floor slot diffuser

Type of floor slot diffuser	S08-1	S10-1	S12-1	S16-2	S20-2	S24-2	S30-3
Tapping/linear metre	2xD100	2xD100	2xD100	3xD100 or 2xD125	3xD100 or 2xD125	2xD160	2xD160

DIMENSIONS (EN MM)

	A	B	C	D	H
S08-1	8	18	109	149	2 possible heights: • 100 to 150 mm • 150 to 200 mm
S10-1	10	20	111	151	
S12-1	12	22	113	153	
S16-2	8	34	125	165	
S20-2	10	38	129	169	
S24-2	12	42	133	173	
S30-3	10	56	147	187	

S08-1
S10-1
S12-1

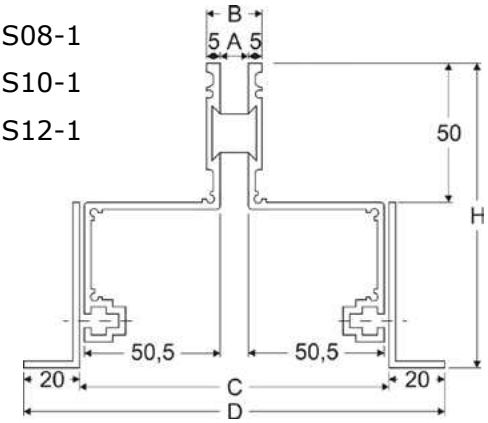

S16-2
S20-2
S24-2

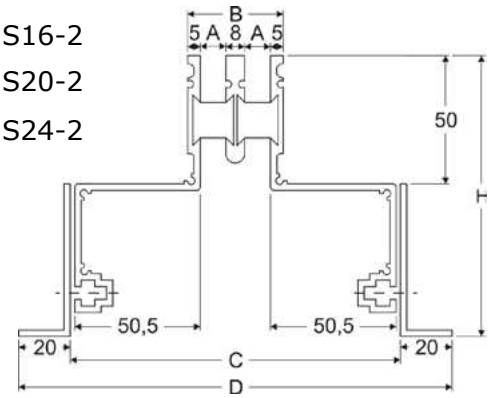

INSTALLATION

Example with a hollow block floor

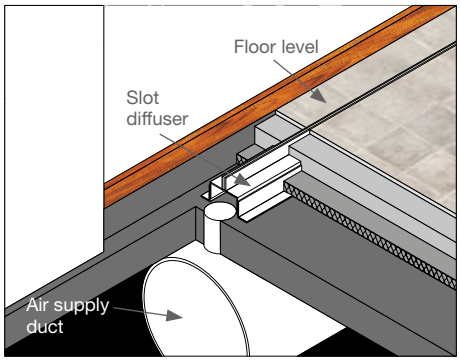

Ventilation accessories

FRESH AIR ACCESSORIES

Fresh air grate with weather protection grate and wall duct (wall thickness 250 to 400mm)
Canal Fast : compact fan to be installed in a duct

Designation / Model	Reference
grate PA160 (200 m3/h)	WFA03480
grate PA200 (300 m3/h)	WFA03481
grate PA250 (400 m3/h)	WFA03482
grate PA315 (700 m3/h)	WFA03483
Damper Ø160	WCH03758
Damper Ø200	WCH03759
Damper Ø250	WCH03760
Damper Ø315	WCH03761

EXTRACTOR OR BLOWER GRATE

Natural anodised aluminium grate with sealing frame. Plan to use standard grates for the intake and double deflector option grates for the blowers. Plan for adjusters when there are several blower grates. Wall or ceiling mounted. Galvanised adapters can be used to connect the grate directly to the circular duct. Res.: 610 x 210 or 610 x 410.

Position	Designation / Model	Reference
	Damper + double defection 625 x 225	WTT02369
	Damper + double defection 625 x 425	WTT02370
6	625 x 225 grate (flow 500 to 1250 m3/h)	WTT02354
	625 x 225 counter frame	WTT02358
	625 x 425 grate (flow 1250 to 2500 m3/h)	WTT02355
	625 x 425 counter frame	WTT02359
	Double deflector 625 x 225	WTT02365
	Double deflector 625 x 425	WTT02366
	Regulator 625 x 225	WTT02367
	Regulator 625 x 425	WTT02368
7	Adapter 600 x 200 (Ø 315)	WCH01226
	Adapter 600 x 200 (Ø 400)	WCH03684
	Adapter 600 x 400 (Ø 500)	WCH01227
	Adapter 600 x 400 (Ø 630)	WCH03685

GRATE FOR CIRCULAR DUCT

Steel grey painted blower grate, double deflector flow regulator. Direct assembly onto circular ducts.

Designation / Model	Reference
grate 625 x 75 on Ø 160 to 400 (250 m3/h)	WFA03467
grate 625 x 125 on Ø 315 to 900 (400 m3/h)	WFA03309
Regulator 625 x 75	WFA03468
Regulator 625 x 125	WFA03310

REINFORCED 600 X 400 GROUND ATE

Reinforced natural aluminium ground grate. Sealing frame supplied. Reinforced frames and profiles.

Position	Designation / Model	Reference
1	Floor grate 600 x 400 (flow 1000 to 2500 m3/h)	WPA01804

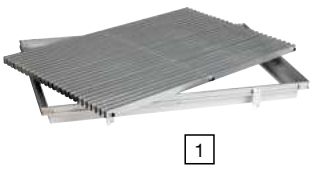

CEILING SLOT DIFFUSER

Anodised natural aluminium ceiling slot diffuser with adapter and regulator. Installation in ceiling service area. Height 285 mm. Ø 160 connection prepared.

Position	Designation / Model	Reference
8	2 Slot diffuser L 900 mm (250 m3/h)	WAL03030
9	Flexible duct Ø 160 (linear m)	WCH01183
10	Connection 45°, Ø 160/315	WCH01256
	Connection 45°, Ø 160/315	WCH01256
	Punching 45° Ø 160/400	WCH01260

FLEXIBLE DUCT

Position	Designation / Model	Reference
9	Flexible duct Ø 160 (linear m)	WCH01183
	Flexible duct Ø 200 (linear m)	WCH01185
	Flexible duct Ø 315 (linear m)	WCH01186
	Flexible duct Ø 400 (linear m)	WCH01187
	Flexible duct Ø 500 (linear m)	WCH01188

BLOWER GRATE

Natural anodised aluminium, fixed wing, flow regulation included. Connection, rectangular and connecting boxes: galvanised metal box fitted between the grate and the blower duct, see diagram below.

Position	Designation / Model	Reference
2	Supply grate 500 x 50 (flow 75 to 125 m3/h) reservation	WAL03029
	Supply grate 500 x 75 (flow 125 to 175 m3/h) reservation	WAL02750
	Supply grate 1000 x 50 (flow 150 to 250 m3/h) reservation	WAL02748
	Supply grate 1000 x 75 (flow 250 to 350 m3/h) reservation	WAL02751
	Supply grate 1000 x 100 (flow 350 to 500 m3/h) reservation	WAL03028
3	Rectangular Connection 500 x 50 Adjustable height 200 to 340 mm	WCH03691
	Rectangular Connection 500 x 75 Adjustable height 200 to 340 mm	WCH01219
	Rectangular Connection 1000 x 50 Adjustable height 200 to 340 mm	WCH01220
	Rectangular Connection 1000 x 75 Adjustable height 200 to 340 mm	WCH01221
	Rectangular Connection 1000 x 100 Adjustable height 200 to 340	WCH03692
4	Connection box 500 x 50 Connection Ø 160 mm	WCH03693
	Connection box 500 x 75 Connection Ø 160 mm	WCH01222
	Connection box 1000 x 50 Connection Ø 160 mm	WCH01223
	Connection box 1000 x 75 Connection Ø 160 mm	WCH01224
	Connection box 1000 x 100 Connection Ø 200 mm	WCH03000
5	Under-floor connection box 500 x 50 Connection Ø 160 mm	WCH03710
	Under-floor connection box 500 x 75 Connection Ø 160 mm	WCH03711
	Under-floor connection box 1000 x 50 Connection Ø 160 mm	WCH03712
	Under-floor connection box 1000 x 75 Connection Ø 160 mm	WCH03713
	Under-floor connection box 1000 x 100 Connection Ø 200 mm	WCH03714

2 + 3

2 + 4

5

FITTING ACCESSORIES

Complete set including: perforated fixing band (2 25 m rolls), cement (3 cartridges), adhesive (2 50 m rolls), suspenders with washers and fixtures.

Position	Designation / Model	Reference
9	Fixing accessories set	WCH03728
	Fixing accessories set	WCH03728
	Flexible anti-vibration sleeve width 150 mm (price per metre)	WCH03409
	Flexible anti-vibration sleeve width 150 mm (price per metre)	WCH03409

Ventilation accessories

Ø 315 DUCTS AND ACCESSORIES

Galvanised metal elements thickness 6/10. Diameter Ø 315 for connection to DF 403, 405, 408.
Ducts to be installed in galleries, ceiling service area, technical facility. Plan to use PVC for buried ducts.

Designation / Model	Reference
Flange (flat punching 90°) Ø 315	WCH01231
Galvanised duct Ø 315 (lm) shipped in 2m lengths	WCH01179
Galvanised elbow 90°, Ø 315	WCH01201
Galvanised elbow 45°, Ø 315	WCH01207
Male sleeve Ø 315	WCH01191
Female sleeve Ø 315	WCH03050
Cap Ø 315	WCH01196
T 90° equal Ø 315	WCH01211
Reduction Ø315/250	WCH03755

Circular duct

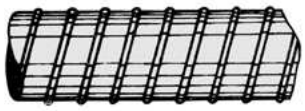

Elbow 90°

Ø 400 DUCTS AND ACCESSORIES

Galvanised metal elements thickness 6/10. Diameter Ø 400 for 410, 412 CAE 508. Ducts to be installed in galleries, ceiling service area, technical facility. Plan to use PVC for buried ducts.

Designation / Model	Reference
Punching 45° Ø 160/400	WCH01260
Galvanised duct Ø 400 (ml) shipped in 2m lengths	WCH01180
Galvanised elbow 90° Ø 400	WCH01203
Galvanised elbow 45° Ø 400	WCH01208
Male sleeve Ø 400	WCH01192
Female sleeve Ø 400	WCH03051
Cap Ø 400	WCH01197
T 90° equal Ø 400	WCH01212
Reducer Ø 400/315	WCH01215

Elbow 45°

Sleeve

Ø 500 DUCTS AND ACCESSORIES

Galvanised metal elements thickness 6/10. Diameter Ø 500 for CAE 510-513 and OMEGA. Ducts to be installed in galleries, ceiling service area, technical facility. Plan to use PVC for buried ducts.

Designation / Model	Reference
Galvanised duct Ø 500 (ml) shipped in 2m lengths	WCH01181
Galvanised elbow 90° Ø 500	WCH01204
Galvanised elbow 45° Ø 500	WCH01209
Male sleeve Ø 500	WCH01193
Female sleeve Ø 500	WCH03052
Cap Ø 500	WCH01198
T 90° equal Ø 500	WCH01213
Reducer Ø 500/400	WCH01216
Reducer Ø 500/315	WCH01217

Cap

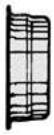

Ø 630 DUCTS AND ACCESSORIES

Galvanised metal elements thickness 6/10. Diameter 630, for Omega 16-20. Ducts to be installed in galleries, ceiling service area, technical facility. Plan to use PVC for buried ducts.

Designation / Model	Reference
Galvanised duct Ø 630 (ml) shipped in 2m lengths	WCH01182
Galvanised elbow 90° Ø 630	WCH03329
Galvanised elbow 45° Ø 630	WCH03424
Male sleeve Ø 630	WCH03325
Female sleeve Ø 630	WCH03720
Cap Ø 630	WCH03330
T 90° equal Ø 630	WCH03326
Reducer Ø 630/500	WCH03327
Reducer Ø 630/400	WCH03328

T 90° equal

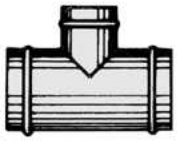

Reducer

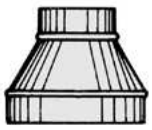

SET®

INTRODUCTION	**P.126**
• Z600 Silent	p.127
DEHUMIDIFICATION SET®	p.129
• SA 1	p.130
• SA 2	p.132
• SA 3	p.134

> A RANGE OF PREMIUM PRODUCTS

By acquiring Schmidt EnergieTechnik (SET®) in 2013, Zodiac® chose to strengthen its top-of-the-range offer by relying on **recognised expertise and know-how** in the fields of dehumidification and heating the swimming pool. Designed for the most demanding consumers, products in the Zodiac® SET® range are **made to order, for ultra-specific production with cutting-edge performance.**

> SET® HEATING

A true gold standard in heat pumps, SET® has designed an ultra-silent heat pump to heat the water in outdoor swimming pools.

Using **an optimised design combined with a variable-speed 'Green-Tech' fan,** Z600 Silent makes less noise than even the quietest dishwasher. It also meets the strictest standards relating to noise in the Swiss Canton of Basel.

> SET® DEHUMIDIFICATION

SET® dehumidification systems are cutting-edge solutions, designed to **dehumidify the air in indoor swimming pools,** whether private or public, small or large, luxury or functional.

In addition to dehumidifying the pool hall, they also renew the air while ensuring performance and energy savings.

The range of Zodiac® SET® dehumidification systems is particularly recommended for hotels, medical facilities or sports and leisure centres.

> GERMAN HIGH QUALITY

Founded at Hemmingen in Germany over 20 years ago, SET® has offered avant-garde products right from the very start, promoting **the unequalled quality and robustness of its equipment, 'Made in Germany'.**

Designed to operate sustainably, Zodiac® SET® solutions comprise Titanium heat exchangers, anodised aluminium casings and a very high quality finish.

MADE IN GERMANY

> A SIZING SERVICE AVAILABLE TO HELP YOU

Benefit from **the support of the Zodiac®** design office or size Zodiac® systems yourself on the internet using the **'BilPi' software**. To find out more, see the 'Services' section in the introduction to this catalogue.

SERVICES +

REFERENCE POINT
Zodiac® offers service solutions to help you. Find these services in this catalogue using this pictogram.

Z600 Silent

+ Always the quietest
+ Industrial design, reflecting its strength
+ Made to order in Germany

2 YEAR WARRANTY

5 YEAR CONDENSER WARRANTY ANTI-CORROSION

SERVICES +

Ti22 TITANE INSIDE

ECO-FRIENDLY

REVERSIBLE

MADE IN GERMANY

	Z600 Silent MD5	Z600 Silent MD7	Z600 Silent TD7	Z600 Silent TD9	Z600 Silent TD12
PRODUCT REFERENCE					
Standard model	WH000377	WH000378	WH000379	WH000380	WH000381

EQUIPMENT

- Horizontal blowing
- Aluminum body, reinforced acoustic protection
- Digital display
- Heating priority mode (filtration pump control)
- Automatic cooling mode
- Automatic defrosting (cycle inversion or forced ventilation)
- Anti-freeze thermostat (minimum operating temperature: -8°C)
- HP & LP safety pressure switch
- Water flow switch
- Titanium water exchanger condenser
- Rotary vane compressor
- Thermostatic expansion valve
- Refrigerant fluid: R410A

PERFORMANCE: AIR AT 24°C / WATER AT 27°C / HUMIDITY 80%					
Operating power (kW)	**12,4**	**16,2**		**25,7**	**34,7**
Consumed power (kW)	1,83	2,38	2,35	3,93	5,18
COP	6,7	6,8		6,5	6,6
PERFORMANCE: AIR AT 16°C / WATER AT 25°C / HUMIDITY 80%					
Operating power (kW)	10,2	13,8		20,6	27,9
Consumed power (kW)	1,8	2,51	2,4	3,7	5
COP	5,6	5,5	5,8	5,5	5,6

TECHNICAL SPECIFICATIONS					
Recommended pool volume* (m^3)	< 60	< 80		< 120	< 160
Average water flow (m^3/h)	8	9		15	17
Hydraulic connection	3 piece union fitting, PVC, Ø50, glued				
Electric power supply	230 V / 1 / 50Hz	230 V / 1 / 50 Hz	400 V / 3 / 50Hz		
Nominal operating power (A)	9,2	12,7	5,2	8,3	10,8
Recommended power cable size **	3 x 2.5	3 x 4	5 x 2.5		5 x 4
Electrical protection	1P+N 16A		3P+N 16A		
Refrigerant fluid quantity (kg)	0,8	1,65		1,8	2,8
Acoustic power (dB(A))	58			60	
Acoustic pressure at 10m (dB(A))	30			32	

*Estimated average values for a private pool with isothermal cover, from 15 May to 15 September. For year-round / indoor pool operation, check out the Bilpi sizing tool on your pro page.
**Cable not provided. Recommended section for a maximum length of 20 meters.

DIMENSIONS (MM) AND WEIGHT

	Z600 Silent MD5	Z600 Silent MD7	Z600 Silent TD7	Z600 Silent TD9	Z600 Silent TD12
Weight (kg)	95	106	106	180	212
L	1300	1450	1450	1450	1450
H	780	970	1940	970	1560
A	384	384	384	384	384
B	97,5	97,5	97,5	97,5	97,5
C	177,5	177,5	177,5	177,5	177,5
D	50	50	50	50	50
E	138	138	138	897	1088

Z600 Silent MD5 MD7 and TD7

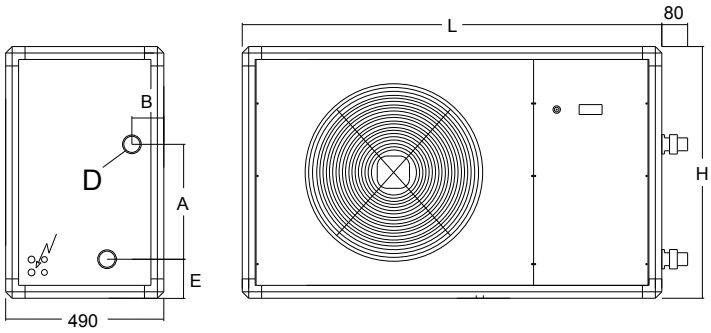

Z600 Silent TD9 and TD12

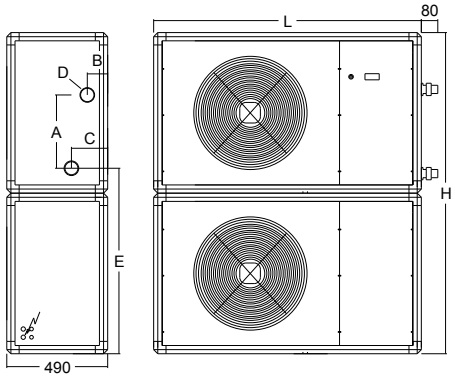

INSTALLATION

- Outside, close to the technical room, at sufficient distance from the pool (according to applicable electrical standards).
- On a stable, solid and level surface.
- Between the heat pump and its surroundings (walls, plants, etc.), maintain minimum distances as shown in the diagram below.

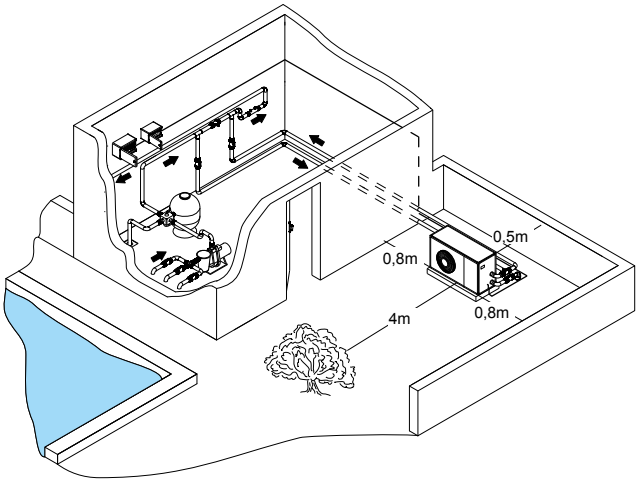

OPTIONAL ACCESSORIES

	Cleaning kit HP	Remote control, Z600
	Specifically formulated for evaporator cleaning. Kit includes an 5L can and a spray bottle	Transfers information and commands of the embedded interface. (Cable not provided).
reference	WMA03491	R0871200

ZPCE: recommended sales price valid from 01/01/2020

> DEHUMIDIFICATION SYSTEMS

Zodiac® SET® dehumidification systems treat the air of indoor swimming pools, private or public, small or large, luxury or functional, in hotels, medical facilities or sports and leisure centres.

They provide:

- **Dehumidification,**
- **Air heating,**
- **Air replacement (or ventilation):** extraction of stale air and introduction of fresh air into the pool hall and, if necessary, adjoining spaces.

As an option, they can also be equipped with a **water-cooled condenser to heat the water in the pool.**

> DESCRIPTION

With modular construction (easy to transport) and an aluminium profile frame with insulated panels, dehumidification systems are equipped with:

- A heat pump,
- A hot water battery,
- Low power direct current fans,
- Filters,
- Motorised dampers,
- Complete regulation performing control and regulation functions, with LCD screen.

SA1 SYSTEM

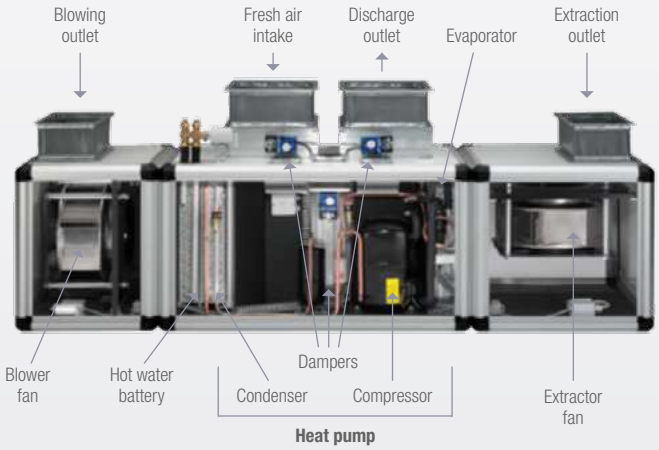

SA2 / SA3 SYSTEM

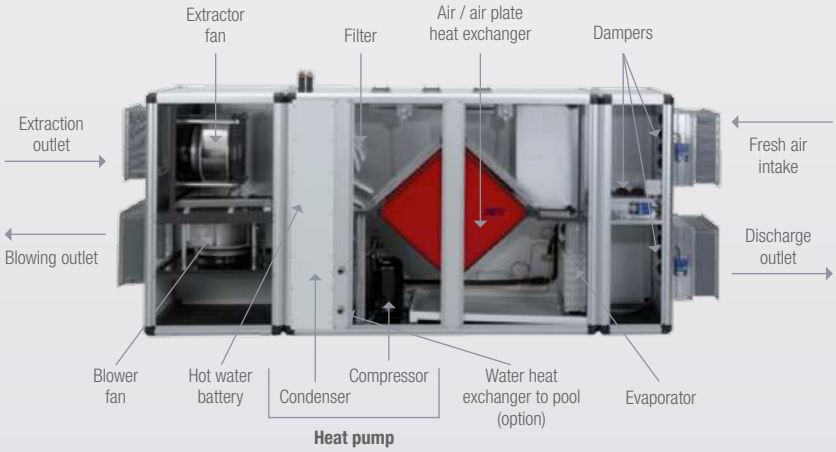

> DESCRIPTION

The SA2 and SA3 ranges are **also equipped with a EUROVENT-certified counter-current heat exchanger,** recovering up to 75% of the energy in the extracted air and so reducing the energy consumption needed to dehumidify, heat and renew the air in the swimming pool.

SELECTION GUIDE	SA1	SA2	SA3
Dehumidification capacity	< 38 L / h	< 38 L / h	< 159 L / h
Air renewal	•	•	•
Air / air heat exchanger		•	•
Integrated hot water battery	•	•	•
Swimming pool condenser (option)	•	•	•

SA 1 Ducted dehumidification unit

2 YEAR WARRANTY

+ Modular unit available for 6 capacities (6 to 38 L/h)
+ Operating mode managed automatically, including fresh air introduction
+ Top-of-the-range equipment
+ Water heating option (water condenser)

SERVICES +

ECO-FRIENDLY

Product offered for sale on the «pool dealer» channel

	SA1010	SA1020	SA1028	SA1040	SA1050	SA1060
PRODUCT REFERENCE						
Standard model	WD001006	WD001010	WD001014	WD001018	WD001022	WD001026
Standard model with water condenser	WD001007	WD001011	WD001015	WD001019	WD001023	WD001027
Mirror model	WD001008	WD001012	WD001016	WD001020	WD001024	WD001028
Mirror model with water condenser	WD001009	WD001013	WD001017	WD001021	WD001025	WD001029
Clock option	WD001054					
Filter detection model	WD001055A					

Our design office is ready to propose the dehumidifcation unit, specifically dimensioned for your project, with its equipment. You'll gain a complete calculation of your installation and the best dehumidification solution on request : BE@zodiac.com

EQUIPMENT

- Heat pump, R407C refrigerant
- Low energy, direct current fans (EC)
- Aluminium profile frame with insulated panel
- Microprocessor control and regulation unit
- Motorised dampers to control air flow
- Temperature and humidity sensors
- Hot water battery with regulating valve
- noise-suppressing mounts

As fitted option:

- Titanium condenser to heat the pool water, clock
- Clock to program bathing and resting times
- Filter detection to indicate filter clogging

TECHNICAL SPECIFICATIONS

Capacity as per VDI2089 (litre/hr)	6.3	12.7	17.8	25.4	31.8	38.1
Recycling capacity (litre/hr)	3.3	4.1	6.1	10.1	11.5	13.8
Air flow rate (m^3/h)	1000	2000	2800	4000	5000	6000
Proportion of fresh air (%)	0-100					
Available pressure at air outlet	240			350		
Available pressure at the air intake	260	240		400		
Maximum absorbed power (kW)	2.5	3.3		5.2	5.9	6.4
Power returned in recycling (kW)	3.9	4.8	7.1	9.7	11.4	13.6
Power of hot water battery (80/60°C) (kW)	10	17.3	20.2	45.8	53	58
Flow rate of hot water battery (80/60°C) (m^3/h)	0.45	0.9		2	2.3	2.6
Pressure drop of hot water battery (80/60°C) (kPa)	5	10		16		
Electricity supply	400V / 3N / 50Hz					
Current fuse (A)	3 x 10	3 x 16	3 x 20			3 x 25
Sound pressure at 1m (dB(A))	55	61	63	81		84

* characteristics under the following nominal conditions: air 30°C, hygrometry 60-80%

ZPCE: recommended sales price valid from 01/01/2020

DIMENSIONS AND WEIGHT

	SA1010	SA1020	SA1028	SA1040	SA1050	SA1060
Overall dimensions (L x W x H in mm)	2240x740x640	2880x790x740		3825x985x985	3825x1185x985	
Maximum delivery dimensions (L x W x H in mm)	1100x740x640	1400x790x740		2100x985x985	2100x1185x985	
Model weight (kg) without options fitted	130	210	220	420	450	470

TAPPING OPTIONS

Intake, outlet, fresh air intake and air discharge tappings can be connected in different positions. To be specified with the order.

Standard model

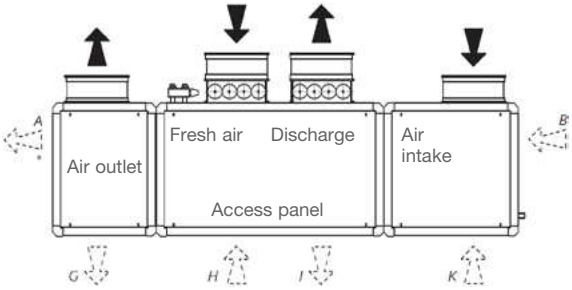

View from above

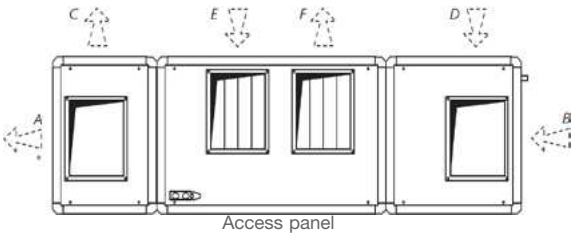

Mirror model

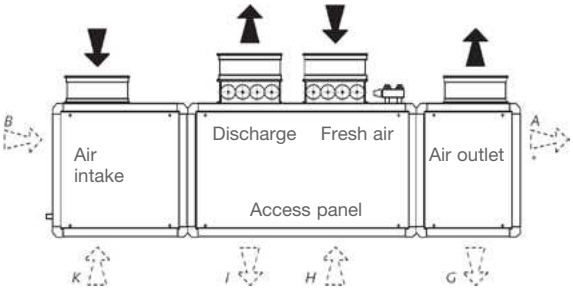

View from above

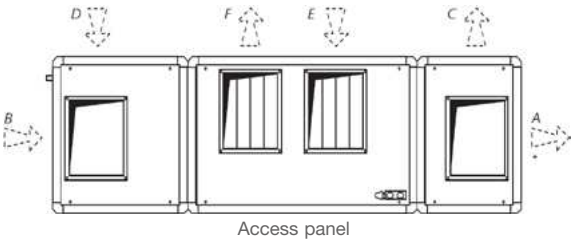

* +150 mm length

	side	rear	bottom
Air outlet	A	C	G
Fresh air	-	E	H
Air intake	B	D	K
Discharge		F	I

SA 2 Ducted dehumidification unit with air/air exchanger

2 YEAR WARRANTY

+ Modular unit with double air intake/air outlet heat exchanger available for 6 capacities (7 to 38 L/h)
+ Operating mode managed automatically, including fresh air introduction
+ Top-of-the-range equipment
+ Water heating option (water condenser)

SERVICES +
ECO-FRIENDLY
ENERGY SAVING

Product offered for sale on the «pool dealer» channel

	SA2012	SA2028	SA2032	SA2040	SA2050	SA2060
PRODUCT REFERENCE						
Standard model	WD001030	WD001032	WD001034	WD001036	WD001038	WD001040
Standard model with water condenser	WD001031	WD001033	WD001035	WD001037	WD001039	WD001041
Clock option	WD001054					
Filter detection model	WD001055A					

Notre bureau d'études est à votre service pour vous proposer la centrale de déshumidification, dimensionnée spécifiquement pour votre projet, et ses equipment.
Vous disposerez ainsi d'une étude complète de votre installation et de la solution de déshumidification adaptée en nous contactant : BE@zodiac.com

EQUIPMENT

- Heat pump, R407C refrigerant
- Low energy, direct current fans (EC)
- Aluminium profile frame with insulated panel
- Double reverse-flow plate heat exchanger, EUROVENT certified, with plastic-coated aluminium plates and bypass
- Microprocessor control and regulation unit
- Motorised dampers to control air flow
- Temperature and humidity sensors
- Hot water battery with regulating valve
- noise-suppressing mounts

As fitted option:

- Titanium condenser to heat the pool water, clock
- Clock to program bathing and resting times
- Filter detection to indicate filter clogging

TECHNICAL SPECIFICATIONS

Capacity as per VDI2089 (litre/hr)	7.6	17.8	20.3	25.4	31.8	38.1
Recycling capacity (litre/hr)	3.6	6.4	9.6	10.1	11.5	13.8
Air flow rate (m^3/h)	1200	2800	3200	4000	5000	6000
Proportion of fresh air (%)	0-100					
Reverse-flow heat exchanger efficiency (8°C/80%-28°C/60%)	61	69		66		
Available pressure at air outlet	220	240		400		
Available pressure at the air intake	270	260		400		
Maximum absorbed power (kW)	2.2	3.4	3.8	5.2	5.9	6.4
Power returned in recycling (kW)	3.7	6.4	9.3	9.7	11.4	13.6
Power of hot water battery (80/60°C) (kW)	11.2	21	24	45.8	53	58
Flow rate of hot water battery (80/60°C) (m^3/h)	0.43	1		2	2.3	2.6
Pressure drop of hot water battery (80/60°C) (kPa)	5	14		16		
Electricity supply	400V / 3N / 50Hz					
Current fuse (A)	3x10	3x16	3x20			3x25
Sound pressure at 1m (dB(A))	55	75		81		84

* caractéristiques aux conditions nominales suivantes : air 30°C, hygrométrie 60-80%

ZPCE: recommended sales price valid from 01/01/2020

DIMENSIONS AND WEIGHT

	SA2012	SA2028	SA2032	SA2040	SA2050	SA2060
Overall dimensions (L x W x H in mm)	2640x740x1236	2845x790x1436		3170x985x1970	3170x1185x1970	
Maximum delivery dimensions (L x W x H in mm)	1500x740x1236	1700x790x1436		1970x985x1970	1970x1185x1970	
Model weight (kg) without options fitted	330	350	400	420	450	470

SA 3 Ducted dehumidification unit with air/air exchanger

Set > Dehumidification > SA 3

2 YEAR WARRANTY

+ Modular unit with double air intake/air outlet heat exchanger available for 6 capacities (44 to 159 L/h)
+ Operating mode managed automatically, including fresh air introduction
+ Top-of-the-range equipment
+ Water heating option (water condenser)

SERVICES +

ECO-FRIENDLY

ENERGY SAVING

Product offered for sale on the «pool dealer» channel

	SA3070	SA3100	SA3125	SA3160	SA3190	SA3250
PRODUCT REFERENCE						
Standard model	WD001042	WD001044	WD001046	WD001048	WD001050	WD001052
Standard model with water condenser	WD001043	WD001045	WD001047	WD001049	WD001051	WD001053
Clock option	WD001054					
Filter detection model	WD001055A					

Notre bureau d'études est à votre service pour vous proposer la centrale de déshumidification, dimensionnée spécifiquement pour votre projet, et ses equipment.
Vous disposerez ainsi d'une étude complète de votre installation et de la solution de déshumidification adaptée en nous contactant : BE@zodiac.com

EQUIPMENT

- Heat pump, R407C refrigerant
- Low energy, direct current fans (EC)
- Aluminium profile frame with insulated panel
- Double reverse-flow plate heat exchanger, EUROVENT certified, with plastic-coated aluminium plates and bypass
- Microprocessor control and regulation unit
- Motorised dampers to control air flow
- Temperature and humidity sensors
- Hot water battery with regulating valve
- noise-suppressing mounts

As fitted option:

- Titanium condenser to heat the pool water, clock
- Clock to program bathing and resting times
- Filter detection to indicate filter clogging

TECHNICAL SPECIFICATIONS

Capacity as per VDI2089 (litre/hr)	44.5	63.6	79.5	101.7	120.8	159
Recycling capacity (litre/hr)	14	21.2	23	33.3	38.7	55.8
Air flow rate (m^3/h)	7000	10000	12500	16000	19000	25000
Proportion of fresh air (%)	0-100					
Reverse-flow heat exchanger efficiency (8°C/80%-28°C/60%)	76		69	72		73
Available pressure at air outlet	400					
Available pressure at the air intake	400					
Maximum absorbed power (kW)	8.7	15	16.5	23	31	39.5
Power returned in recycling (kW)	12.9	18.9	21.2	30.6	36.6	51.6
Power of hot water battery (80/60°C) (kW)	58	91	114	146	174	228
Flow rate of hot water battery (80/60°C) (m^3/h)	3.9		4.9	6.2	7.4	9.8
Pressure drop of hot water battery (80/60°C) (kPa)	11				20	24
Electricity supply	400V / 3N / 50Hz					
Current fuse (A)	3x35	3 x 50	3x50	3x63	3x100	3x125
Sound pressure at 1m (dB(A))	86	88	87	90	96	90

* caractéristiques aux conditions nominales suivantes : air 30°C, hygrométrie 60-80%

ZPCE: recommended sales price valid from 01/01/2020

DIMENSIONS AND WEIGHT

	SA3070	SA3100	SA3125	SA3160	SA3190	SA3250
Overall dimensions (L x W x H in mm)	5550x1050x2200		5550x1350x2200	5790x1350x2800	5910x1680x2800	7110x1680x3460
Maximum delivery dimensions (L x W x H in mm)	2730x1050x2200		2730x1350x2200	2970x1350x2800	2970x1680x2800	3210x1680x3460
Model weight (kg) without options fitted	1400	1760	1950	2100	2300	3550

ZPCE: recommended sales price valid from 01/01/2020

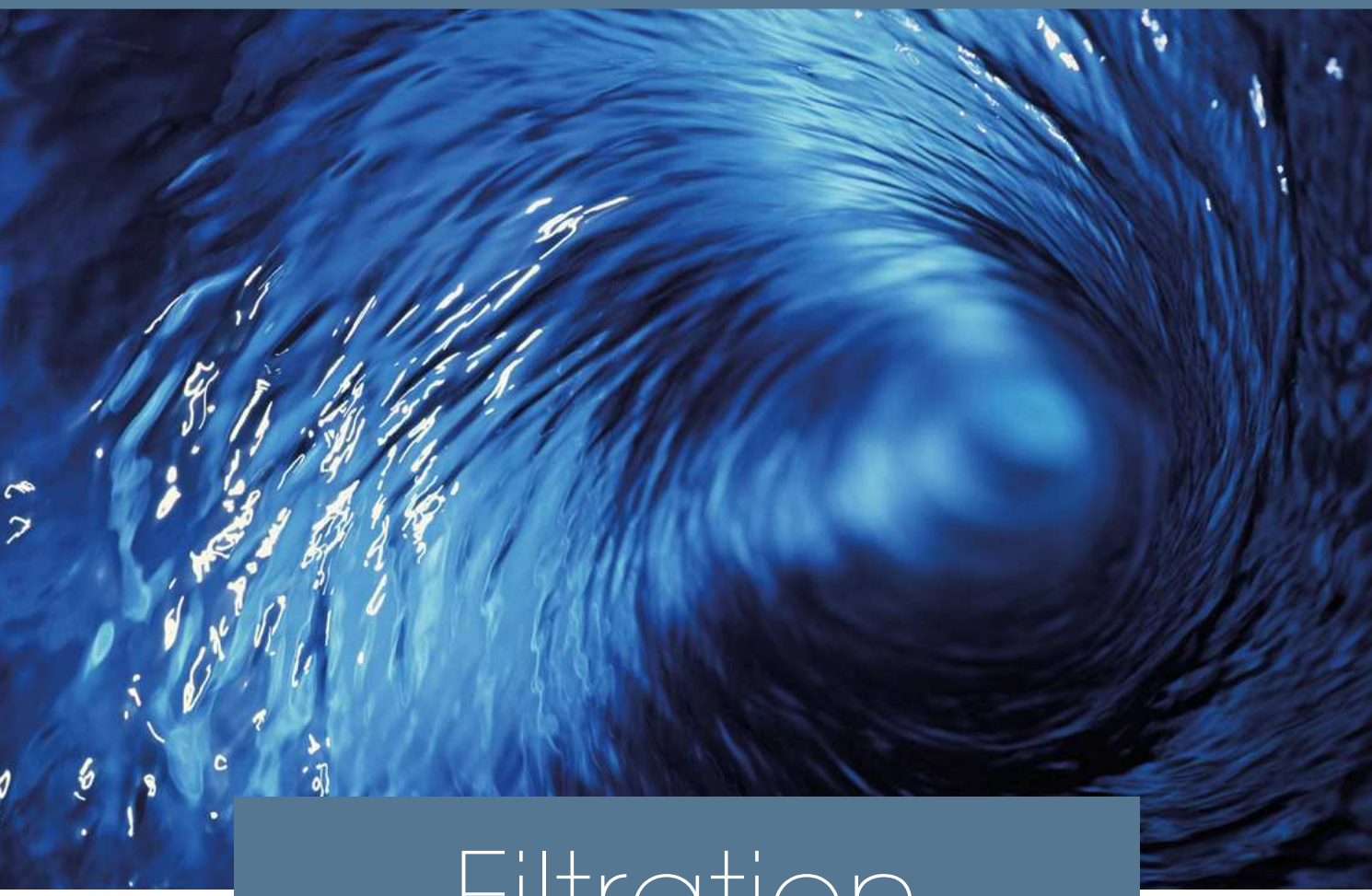

Filtration

INTRODUCTION	**P.138**
PUMPS	**P.142**
• FloPro™	p.144
• FloPro™ e3	p.146
• FloPro™ VS	p.148
• iQPUMP	p.150
FILTER	**P.151**
• CS	p.152
• MS	p.154
• Crystal Clear	p.156
DESIGN	**P.157**
• NL Leds	p.159
• PowerFall	p.162

> ZODIAC® FILTRATION, A RANGE DESIGNED FOR YOU

Zodiac® is expanding its pool equipment solution by offering a complete range of pumps and filters.

Using Zodiac® expertise that has been proven on the American and Australian markets, **this range has been designed with your needs in mind, to help you give customer satisfaction**.

> A SOLUTION ADAPTED TO EVERY NEED

• **PUMPS**

FloPro™ VS
Variable speed pump
8 speeds for maximum energy efficiency

iQPUMP
Wi-Fi device for FloPro™ VS
Zodiac® innovation :
Connected pump for intuitive control from your smartphone

FloPro™ e3
Variable-speed pump
Simple and energy efficient

FloPro™
Single-speed pump
A range of long-lasting and efficient pumps

• **FILTERS**

CS
Cartridge filters
Eco-friendly cartridge filters for the finest filtration

MS
Polyester filters
A range of efficient and long-lasting premium media filters

CRYSTAL CLEAR
Glass filter media
Filter glass that is suitable for any type of sand filter for crystal clear water

BUILT TO LAST

The filtration system is the heart of a pool, so it is of the utmost importance that it is built-to-last.

> QUALITY THAT STANDS THE TEST OF TIME

The Zodiac® group has been specialising in the manufacture of filtration equipment for many years.

- **A leading group:** Zodiac® filters and pumps are available throughout the world.
- **Market expertise**: technology that has been sold for 10 years in the United States and 9 years in Australia.
- **Highly reliable:** long-term customer satisfaction.

APPROVED QUALITY APPROVED

> QUALITY THAT HAS BEEN CHECKED IN OUR LABORATORIES

Products in our filtration range undergo endurance testing in our laboratories in France and Europe before they are released.

600,000+ hours of tests were carried out on engines and wear parts before the launch of the European range.

> QUALITY GUARANTEED

- **3-year warranty** on pumps, filters **and all parts,** including wear parts.
- **5-year warranty** for cartridge filters and **10-year warranty** on polyester filter tanks.

3 YEAR WARRANTY ALL PARTS

10 UP TO YEAR WARRANTY ON TANKS (MS FILTER)

> INCREASED HYDRAULIC EFFICIENCY

FloPro™ pumps are among the best performing in their category thanks to a high water flow to power ratio.

As proof, the 3/4 HP (75M) FloPro™ pump provides water flow similar to that of numerous 1 HP* pumps on the market.

The outcome is up to 25% energy savings for exactly the same results.

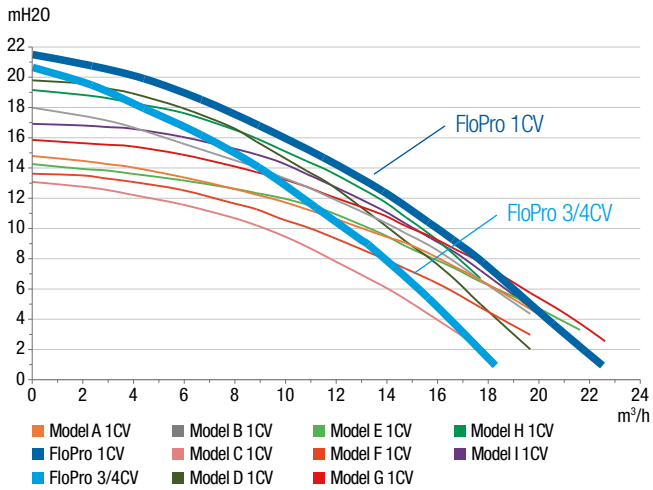

* Comparison based on performance graphs published by manufacturers.

EASY TO INSTALL

Our filtration range has been well thought-out to make your everyday life easier: **simple, quick to install and easy to maintain.**

> PUMPS THAT ARE EASY TO INSTALL, EVEN WHEN REPLACING

All Zodiac® filtration pumps are available from a unique FloPro™ platform that guarantees the same installation, replacement and maintenance advantages, for all models in our filtration range.

Strengths:

1 Suction and discharge with **double thread** (external and 2'' internal),

2 Exclusive 63/50 mm **union connectors**,

3 **Bases to elevate the pump** (included with FloPro™ VS, optional for other models)

- **Easy Retrofit:** Pumps can be installed without changing the piping and can be **easily fitted into the majority of existing installations, thanks to the bases.**
- Easy Retrofit system is valuable for both single speed and variable speed versions of a same pump model.
- Replacement compatibility based on data published by manufacturers. A tolerance of +/- 10 mm is acceptable if [intake pipe length] = 4x[pipe diameter], according to applicable hydraulics standards.

Pump models written in purple are Easy Retrofit compatible for both inlet and outlet.
Pump models written in blue are Easy Retrofit compatible for inlet only (slight outlet pipe modification needed).

UPDATED LIST

Pump to replace	Retrofit solution
Calpeda® : MPC 11, 21, 31 & 41 (without base) **Hayward®** : TriStar, SuperPump, Max-Flo XL, Max-Flo, SuperPool, SuPerPool II, Super II, RS II **Kripsol®** : Koral-KSE / KSV, Caribe-CK, Ondina-OK, Epsilon-EP, Prime-KPR / KPRV, KS Evo, KSX Pro **KSB®** : Filtra N **Pentair®** : SuperFlo **Procopi®** : Eurostar II, Eurostar Eco Touch Pro **PSH®** : Mini.3, Lia S, ND.1, ND.2 **Saci®** : Optima **Speck** : BADU Bettar / TOP / Magna, BADU Gamma, BADU Eco Touch-Pro / Eco Soft, BADU90, BADU Prime / Prime Eco VS **StaRite®** : SuperMax, S5P1R **Waterco®** : Aquamite, Supatuf	**A** **FloPro™, without base**
Aqua Technix® : Aqua Master **DAB®** : Swim, Euroswim & Europro 50, 75 & 100, E-Swim **Espa®** : Silen Plus 1M, Silen Plus 2M / 3M, Silen S, Silen S2, Silver **Majestic®** : Master **Saci®** : Winner, [e]Winner **Speck®** : BADU Profi **Waterco®** : Supasteam	**B** **FloPro™ + thin base**
AstralPool® : Europa **Davey®** : Silensor SLS, Silensor SLL, SilensorPro VSD200, SilensorPro VSD400 **Pentair®** : UltraFlow, UltraFlow Plus, Max-E-ProXF, 5PXF **Speck®** : BADU EasyFit **Starite®** : Ultra-Glas, S5P3R	**C** **FloPro™ + thin base + spacing**
AstralPool® : Victoria Plus, Victoria Plus Silent, Glass Plus, Discovery, Niagara **Calpeda®** : MPC 11, 21, 31 & 41 (avec son socle) **Pentair®** : Challenger, WhisperFlo **StaRite®** : WhisperPro, S5P5R	**D** **FloPro™ + thick base**
StaRite® : 5P2R, S5P2R, 5P6R, SW5P6R, Max-E-Pro **Waterco®** : Lacronite, Lacronite ECO-V	**E** **FloPro™ + thick + thin base**

DESIGNED TO ATTRACT YOUR CLIENTS

Our filtration range has been created based on the needs expressed by a panel of consumers*. So, this new range and its specific advantages will be sure to win your customers over.

> STRONG GUARANTEES

86%* of consumers are looking for reliable, long-lasting products

- 3-year warranty on pumps and filters, and all parts, including wear parts (mechanical interiors, pre-filter basket, joints, filter screens, etc.).
- 5-year warranty on filter tanks.

3 YEAR WARRANTY ALL PARTS

UP TO 10 YEAR WARRANTY ON TANKS (MS FILTER)

> EASY MAINTENANCE

75% of consumers favour the ease of maintenance

- All our pumps come fitted with a very large pre-filter basket (2.6 L) for easy maintenance, meaning you can wait longer between cleyears.

LARGE CAPACITY

UP TO 117% LARGER

> ENERGY SAVINGS

66% of consumers want to take control of their energy consumption

- Our variable-speed pumps are incomparably energy-efficient.
- Our single-speed pumps are high-performance, which meyears you can use less powerful models (depending on the dimensions).

ECO FRIENDLY

> DEDICATED SERVICES

Our filtration range is combined with a system of dedicated and exclusive services for optimal response time:

Customer service hotline
Calls are given priority with a dedicated team of filtration experts.

After sales requests
Requests are given priority and parts or products are replaced within 24 hours.

Dispatch
Replacement parts are sent and products under warranty are dispatched and returned by prepaid postage.

*"Use and Attitudes" consumer survey conducted in France in 2015 on a representative sample of 779 people.

A COMPLETE RANGE TO SUIT EVERY NEED

> VARIABLE SPEED, THE NEW ECO-SILENT STANDARD

The variable speed pump can operate for a longer daily duration at a lower speed, while offering **4 essential advantages:**

1) SILENT OPERATION

Zodiac® variable-speed pumps emit up to 24 dB(A)* less than a single-speed pump, which is equivalent to the noise level in a library.

Did you know?

A reduction of 3 dB(A) represents a noise that is perceived to be twice as quiet to the human ear.

2) ENERGY SAVINGS

Thanks to their TEFC** permanent magnet synchronous motors using ECM*** technology, Zodiac® variable-speed pumps help **reduce electric consumption by up to 90%**. So, in comparison with a single-speed pump, it pays for itself in just a few seasons.

Did you know?

Make sales easier using our online energy saving calculator to show your clients the savings they could make.

Zodiac® online energy saving calculator

3) OPTIMISED WATER TREATMENT

Operating at a slower speed and with the flexibility to adapt to all pools, the speed at which the water passes through the filter is reduced and **filtration is greatly improved**. This also reduces the chances of the filter clogging.

Did you know?

The combined use of a variable-speed pump and a cartridge filter gives you an eco-friendly system that consumes less water (no backwash).

4) CONNECTIVITY

With the new iQPUMP Wi-Fi connecting device, it's now possible to **remotely manage FloPro™ VS pump thanks to the iAquaLink™ app**.

Did you know ?

Benefit from an intuitive user interface to control your filtration system thanks to iAquaLink™ app.

Manage the pump and program up to 10 timers without being on site.

Available on the App Store

ANDROID APP ON Google play

3 YEAR WARRANTY

LOW NOISE LEVEL

ENERGY SAVING

ECO FRIENDLY

LARGE CAPACITY

EASY MAINTENANCE

EASY RETROFIT

MIN MAX 0-3450 RPM

iAquaLink CONTROL

* Compared to a standard filtration pump emitting at least 66 dB(A). Values expressed in A-weighted acoustic power level according to ISO standard 3741.
** TEFC = Totally-Enclosed Fan-Cooled
*** ECM = Electronically Commutated Motor (= electronically controlled "brushless" motor)

> SINGLE-SPEED PUMPS, LONG-LASTING AND EFFICIENT FOR ALL POOLS

FloPro™ pumps are designed with corrosion-resistant materials. The body of the pump is made of very thick polypropylene, **which makes it long-lasting and silent.**

Equipped with highly energy-efficient synchronous motors, the range is available in 9 models (from 0.5 to 2.0 HP, available in mono- or tri-phase, except for the 0.5 HP model) **to meet the needs of most pools.**

The FloPro™ platform is compatible with most equivalent pumps on the market with no restrictions and no need to alter piping, thanks to the "Easy Retrofit" system.

3 YEAR WARRANTY

ALL TYPES OF SWIMMING POOLS

LARGE CAPACITY

EASY MAINTENANCE

EASY RETROFIT

STANDARD INSTALLATION

1. FloPro™ pump
2. Boreal filter
3. Heating system
4. Water treatment system

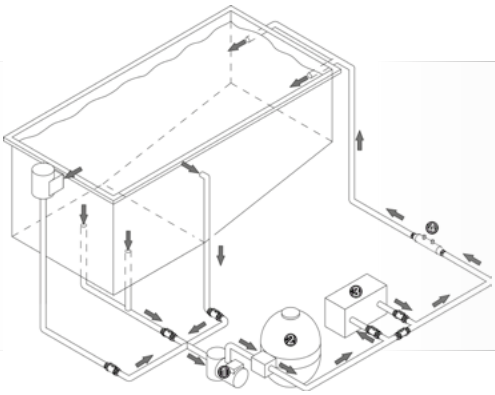

COMPARATIVE TABLE OF THE RANGE

	FloPro™ VS	FloPro™ VS AUT	FloPro™ e3	FloPro™
	Variable-speed pump, for maximum energy efficiency		Variable-speed pump, simple and energy-efficient	Single-speed pumps, long-lasting and efficient for all pools
Warranty	3 years	3 years	3 years	3 years
"Easy retrofit" installation	•	•	•	•
Pump bases for Easy Retrofit	•	•	Option	Option
High capacity pre-filter	•	•	•	•
Number of speeds	8	10	3	1
Pump speed	600-3450 RPM		1000-2850 RPM	2850 RPM
Number of models	1	1	1	9
Power (P2)	1,65 CV		1,0 CV	0,5 à 2,0 CV
Max. pool volume	100 m³		80 m³	Up to 150 m³
Optimum efficiency	30-80 m³		15-60 m³	N/A
Removable user interface	•			
Dry contacts control	•			
Compatible with Zodiac® AquaLink® TRi automation	Possible	•		
Compatible with iQPUMP (smartphone control)	Possible	•		

FloPro™ - Single speed

3 YEAR WARRANTY

+ Built to last
+ High efficiency
+ Silent

ALL TYPES OF SWIMMING POOLS | EASY RETROFIT | ENERGY SAVING

	FloPro™ 50M	FloPro™ 75M	FloPro™ 75T	FloPro™ 100M	FloPro™ 100T	FloPro™ 150M	FloPro™ 150T	FloPro™ 200M	FloPro™ 200T
PRODUCT REFERENCE									
Standard model	WP000147	WP000148	WP000149	WP000150	WP000151	WP000152	WP000153	WP000154	WP000155

ACCESSORIES INCLUDED IN THE PACK

63/50mm union tailpieces

DESCRIPTION

Operating mode(s)	Controlled by the filtration timer
Nominal speed	2850 RPM
Safety features	Automatic shut down in case of high amperage / overheat situation
Filter basket volume	2,6 L
Compatible pipework	DN50 mm & DN63 mm (2” inlet & outlet threaded ports, 63/50mm union tailpieces provided)
Use	Fresh water and salt water up to 6 g/L (6000 ppm)

TECHNICAL SPECIFICATIONS

Pump type	Self-priming water pump							
Motor type	Asynchronous motor, TEFC*, class F insulation							
Efficiency	> 80 % (as per IE3 standard)							
Output power HP (P2)	0.5	0.75		1		1.5		2
Output power Kw (P2)	0.37	0.55		0.75		1		1.5
Max amperage (A)	3.5		1.2	4.2	1.6	6	3.2	7.6	3.5
Power supply	Single phase		3-phase	Single phase	3-phase	Single phase	3-phase	Single phase	3-phase
Flow rate at 10m head (m^3/h)	10,3 m^3/h	13,2 m^3/h		15,8 m^3/h		20,8 m^3/h		27 m^3/h
Maximum flow rate (m^3/h)	16,8 m^3/h	18,6 m^3/h		22,9 m^3/h		27,4 m^3/h		35,5m^3/h
Maximum manometric Head (m)	17,8 m	20,7 m		21,5 m		22,3 m		24,5 m
Maximum water temperature	35 °C							
Protection rating	IPX5							

* TEFC = Totally Enclosed Fan Cooled

9 317545 270357	9 317545 270364	9 317545 270371	9 317545 270388	9 317545 270395
FloPro™ 50M	FloPro™ 75M	FloPro™ 75T	FloPro™ 100M	FloPro™ 100T
9 317545 270401	9 317545 270418		9 317545 270425	9 317545 270432
FloPro™ 150M	FloPro™ 150T		FloPro™ 200M	FloPro™ 200T

PERFORMANCE

- Performance curves for FloPro™ single speed pump range.
- Manometric pressure is expressed as "pump head" in meters of water: 1 bar = 10.19 m.

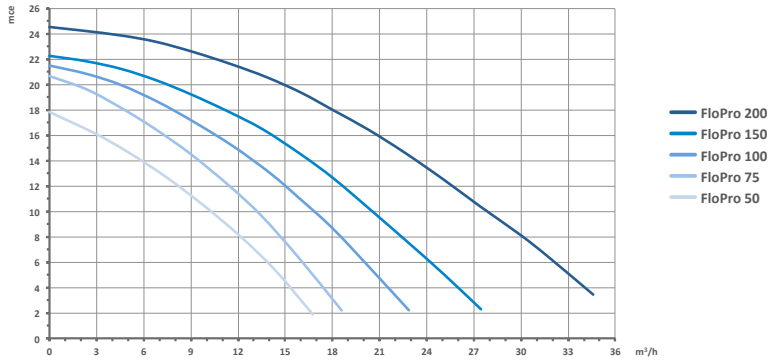

DIMENSIONS AND WEIGHT

	FloPro™ 50M	FloPro™ 75M	FloPro™ 75T	FloPro™ 100M	FloPro™ 100T	FloPro™ 150M	FloPro™ 150T	FloPro™ 200M	FloPro™ 200T
Length A	58,3 cm		54,3 cm	58,3 cm	55,3 cm	58,3 cm	56,8 cm	58,3 cm	
Height	32,4 cm (without pump base)								
Width	25,4 cm								
Weight (pump only)	16 kg	17 kg			18 kg	19 kg	20 kg	21 kg	

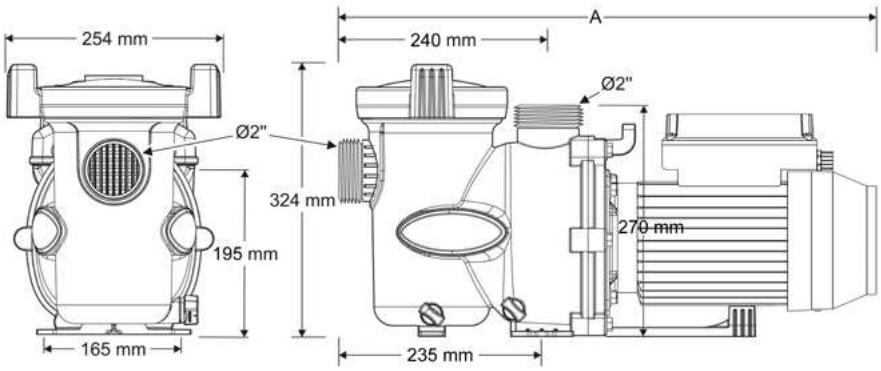

INSTALLATION

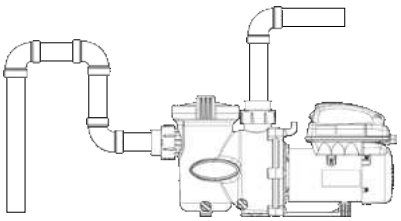

Incorrect : Air retention and risk of incorrect pre-filter filling.

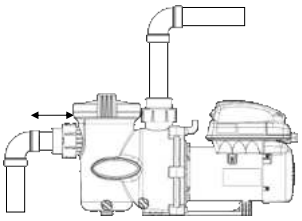

Incorrect : Suction pipe too short, risk of cavitation.

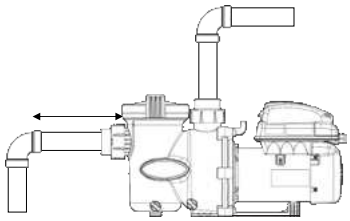

Correct : Length of suction pipe = 4 x pipe diameter (20cm for 50mm and 25cm for 63mm)

SPARE PARTS Spare parts p.300

OPTIONAL ACCESSORIES

ASSOCIATED PRODUCTS

	Thin pump base	Large pump base	CS Cartridge Filter	MS Filter
reference	R0486701	R0546401	WF000024/25	WF000094/95/96/97 & 98

FloPro™ e3 - Variable speed

Filtration > Pumps > FloPro™ e3

3 YEAR WARRANTY

+ Guaranteed energy savings
+ Ultra-silent
+ The variable speed essentials, for all pools up to 80m3

ALL TYPES OF SWIMMING POOLS | EASY RETROFIT | ENERGY SAVING | ECO-FRIENDLY | LOW NOISE LEVEL

	FloPro™ e3 100
PRODUCT REFERENCE	
Standard model	WP000156

ACCESSORIES INCLUDED IN THE PACK

63/50mm union tailpieces

DESCRIPTION	
User interface	1-line LCD screen (blue)
Operating mode(s)	Controlled by the filtration timer
Number of speeds	3 programmable speeds (+/- 50 RPM) Factory settings: ECO (1400 RPM), Clean (2150 RPM) & BOOST (2850 RPM)
Priming	Automatic at startup (2 min at 2850 RPM)
Safety features	Automatic shut down in case of high amperage / overheat situation
Filter basket volume	2,6 L
Compatible pipework	DN50 mm & DN63 mm (2” inlet & outlet threaded ports, 63/50mm union tailpieces provided)
Use	Fresh water and salt water up to 6 g/L (6000 ppm)
TECHNICAL SPECIFICATIONS	
Pump type	Self-priming water pump
Motor type	Synchronous motor (ECM* technology), TEFC**, class F insulation
Efficiency	> 80 % (as per IE3 standard)
Output power HP (P2)	1
Output power Kw (P2)	0.75
Power supply	220-240 VAC - 50 Hz
Flow rate at 10m head (m^3/h)	16,3 m^3/h (at 2850 RPM)
Maximum flow rate (m^3/h)	22,4 m^3/h
Maximum manometric Head (m)	19,1 m
Maximum water temperature	35 °C
Speeds	1000 - 2850 RPM (adjsutable by 50 RPM increments)
Protection rating	IPX5

*: ECM = Electronically Commutated Motor
**: Totally-Enclosed Fan-Cooled

9 317545 270449

PERFORMANCE

- Performance curves shown for example speeds (each speed has a unique curve).
- Manometric pressure is expressed as "pump head" in meters of water: 1 bar = 10.19 m.

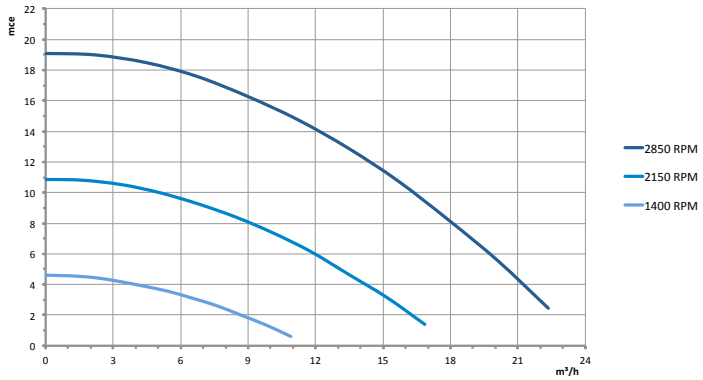

DIMENSIONS AND WEIGHT

Length	58 cm
Height	32,4 cm (without pump base)
Width	25,4 cm
Weight (pump only)	10 kg

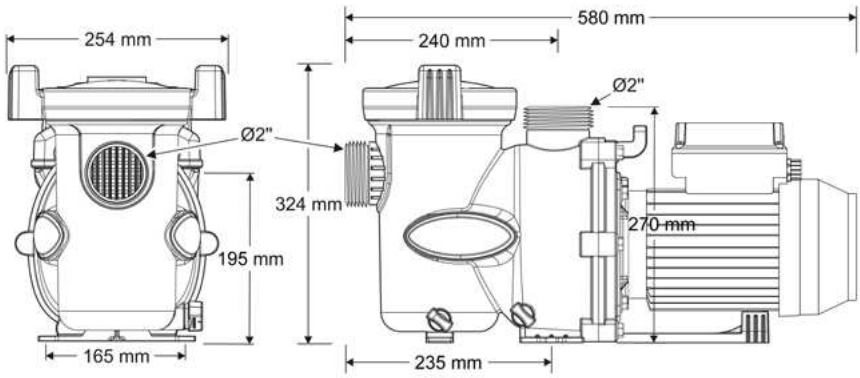

INSTALLATION

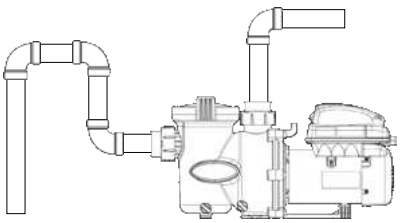

Incorrect: Air retention and risk of incorrect pre-filter filling.

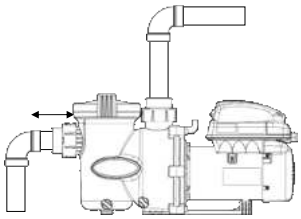

Incorrect: Suction pipe too short, risk of cavitation.

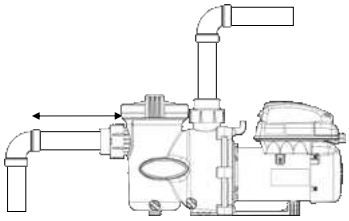

Correct: Length of suction pipe = 4 x pipe diameter (20 cm for 50 mm and 25 cm for 63 mm).

SPARE PARTS Spare parts p.302

OPTIONAL ACCESSORIES

ASSOCIATED PRODUCTS

	Thin pump base	Large pump base	CS Cartridge Filter	MS Filter
reference	R0486701	R0546401	WF000024/25	WF000094/95/96/97 & 98

FloPro™ VS - Variable speed

Filtration > Pumps > FloPro™ VS

3 YEAR WARRANTY

+ Guaranteed energy savings and silence
+ Smart operation
+ Remote control

ALL TYPES OF SWIMMING POOLS · EASY RETROFIT · ENERGY SAVING · ECO-FRIENDLY · LOW NOISE LEVEL · iAquaLink COMPATIBLE · MagnaPool ECOSYSTEM

	FloPro™ VS	FloPro™ VS AUT
PRODUCT REFERENCE		
Standard model	WP000003	WP000079

ACCESSORIES INCLUDED IN THE PACK

Wall mounting kit (standard FloPro™ VS only)	Thin pump base	Large pump base	63/50mm union tailpieces

DESCRIPTION		
User interface	1-line LCD screen (blue)	1-line LCD screen (blue)
Languages	6 (FR-EN-ES-DE-IT-NL)	6 (FR-EN-ES-DE-IT-NL)
Operating mode(s)	Autonomous, connected to Zodiac® automation, external control by dry contacts	Autonomous, connected to Zodiac® automation, external control by dry contacts
Clock / Timer	24h clock, timers (speeds 1 & 2), timeout mode (speeds 3 & 4)	Via iAquaLink™ app (up to 10 timers)
Number of speeds	8 programmable and assignable speeds (+/- 10 RPM)	10 programmable speeds via iAquaLink™ app
Priming	Automatic at startup, adjustable priming speed and duration	
Safety features	Electronic freeze protection Automatic shut down in case of high or low tension	
Filter basket volume	2,6 L	
Compatible pipework	DN50 mm & DN63 mm (2” inlet & outlet threaded ports, 63/50mm union tailpieces provided)	
Use	Fresh water and salt water up to 6 g/L (6000 ppm)	
TECHNICAL SPECIFICATIONS		
Pump type	Self-priming water pump	
Motor type	Permanent magnet synchronous motor (ECM* technology), TEFC**, class F insulation	
Efficiency	> 80 % (as per standard IE3)	
Output power HP (P2)	1,65 HP / 1,23 kW	
Output power Kw (P2)	1.23	
Power supply	220-240 VAC - 50/60 Hz	
Flow rate at 10m head (m^3/h)	24,1 m3/h (at 3450 RPM)	
Maximum flow rate (m^3/h)	30,7 m^3/h	
Maximum manometric Head (m)	21,5 m	
Maximum water temperature	35 °C	
Speeds	600 - 3450 RPM (adjustable by 10 RPM increments)	
Protection rating	IPX4	
Connections for external controls	RS485 for connection to AquaLink® TRi or iQPUMP, dry contact for external activation (speeds 1 to 4)	RS485 for connection to AquaLink® TRi or iQPUMP

9 317545 023991 — FloPro™ VS

9 317545 021102 — FloPro™ VS AUT

*: ECM = Electronically Commutated Motor
**: Totally-Enclosed Fan-Cooled

1 RANGE, 3 SOLUTIONS

I WANT A CONNECTED POOL		I WANT A CONNECTED PUMP		I WANT A PUMP ONLY
Pump model	Remote control	Pump model	Remote control	
FloPro™ VS AUT	eXO® iQ Range Hydroxinator® iQ	FloPro™ VS AUT	iQPUMP	FloPro™ VS
WP000079	cf p.178	WP000079	WA000017	WP000003

PERFORMANCE

- Performance curves shown for example speeds (each speed has a unique curve).
- Manometric pressure is expressed as "pump head" in meters of water: 1 bar = 10.19 m.

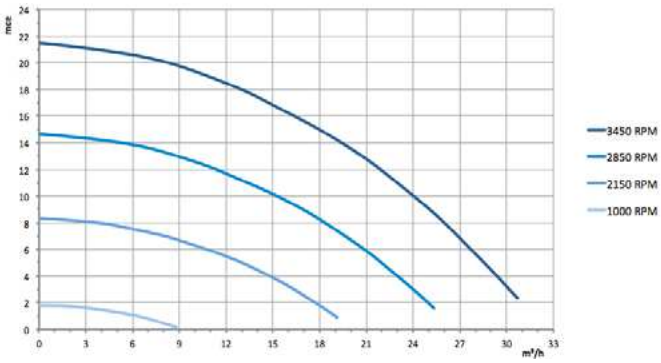

DIMENSIONS AND WEIGHT

Length	59,8 cm
Height	32,4 cm (without pump base)
Width	25,4 cm
Weight (pump only)	17 kg

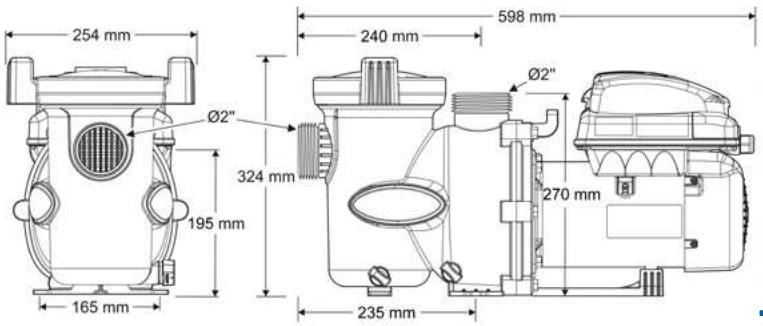

Spare parts p.304

ASSOCIATED PRODUCTS

	AquaLink® TRi	iQPUMP	CS Filter	MS Filter	eXO® iQ	Hydroxinator® iQ
reference	WA000016	WA000017	WF000024/25	WF000094/95/96/97 & 98	WW000162/163/164 165 / 170 & 171	WW000172/173/174 & 175

iQPUMP

Filtration > Pumps > iQPUMP

3 YEAR WARRANTY

+ Remote control anywhere, anytime
+ Easy configuration
+ Maximized energy efficiency

EASY INSTALLATION

iAquaLink CONTROL

ECO-FRIENDLY

	iQPUMP
PRODUCT REFERENCE	
Standard model	WA000017

ACCESSORIES INCLUDED IN THE PACK

Wall mounting kit

DESCRIPTION	
User interface	Quick control interface via buttons and Leds
Mobile user interfaces	Free iAquaLink™ app for Android™ and Apple® smartphones and tablets
Operating mode(s)	Wi-Fi connection for remote access and control using iAquaLink(tm) app User interface onto Wi-Fi device for initial setup and on-site manual control.
Compatible with	FloPro™ VS AUT (dedicated model) FloPro™ VS pump (all manufacturing years are compatible)
TECHNICAL SPECIFICATIONS	
Wi-Fi connectivity	Wi-Fi 802.11b/g/n/ac *
Wi-Fi range	Up to 150 m **
Length A câble RS485	4,3 m
Protection rating	IPX4
Installation	Indoor or outdoor under a shelter
Dimensions (l x h x p)	13,7 x 31,0 x 3,2 cm
Power supply	Connected to the pump FloPro™ VS (RS485 cable provided)

* : A Wi-Fi band selection in router's settings menu may be needed depending on situation.
** : Max range without obstacles (partitions, walls, ironwork…). Use of a Wi-Fi range extender or a powerline Wi-Fi hotspot may be required in some cases.

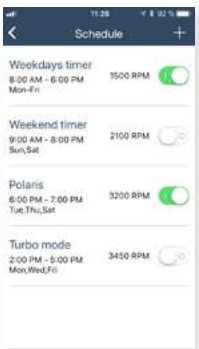

9 317545 020648

A COMPLETE FILTRATION RANGE

> A FILTER FOR EVERY POOL

Central component of the filtration system, **the filter contains a filtration medium (that may be sand, glass, a filter or another material, depending on the filter type).** So, debris and impurities are trapped in the filter tank.

An efficient filtration system is **essential for the effectiveness of water treatment.**

Zodiac® offers 2 filter ranges to best meet varying user needs:

> CS CARTRIDGE FILTERS

+ very compact filters that can be installed in confined technical rooms
+ ultra-fine filtration up to 15-20 µm for translucent water
+ saves water during maintenance (no backwash)
+ no need to connect to the drain

3 YEAR WARRANTY ALL PARTS · 5 YEAR WARRANTY ON TANKS · ALL TYPES OF SWIMMING POOLS · FINE FILTRATION · ECO FRIENDLY

> MS MEDIA FILTERS

+ long-lasting glass-fibre reinforced polyester filters
+ designed to work with sand and filtration glass (Crystal Clear)
+ easy maintenance

3 YEAR WARRANTY ALL PARTS · 10 YEAR WARRANTY ON TANKS · ALL TYPES OF SWIMMING POOLS · EASY MAINTENANCE

COMPARATIVE TABLE OF THE RANGE

	CS Eco-friendly cartridge filters for fine filtration	MS Simple and long-lasting sand filters
Warranty	5 years (tank) / 3 years	10 years (tank) / 3 years
Easy installation	Yes (VersaPlumb® kit)	-
Filtration medium	CS cartridge	Glass or sand
Filtration level	15 - 20 microns	20 - 50 microns
Number of models	2	5
Footprint	37 cm	47-95 cm
Max. pool volume	170 m^3	170 m^3
Pressure gauge	Yes	Yes
Multiway valve	N/A	Yes
Drain	Yes (+ connection kit)	Yes, double (media + water)

CS - Cartridge filter

Filtration > Filters > CS

+ Ultra fine filtering
+ easy maintenance and water savings
+ Adapted to any pool pad

ALL TYPES OF SWIMMING POOLS

FINE FILTRATION

ECO-FRIENDLY

3 YEAR WARRANTY

5 YEAR WARRANTY ON TANK

	CS 100	CS 150
PRODUCT REFERENCE		
Standard model	WF000024	WF000025

ACCESSORIES INCLUDED IN THE PACK

15-20 µm filtering cartridge	63/50mm union tailpieces	63/50mm union tailpieces	Pressure gauge

DESCRIPTION	
Tank material	Fiber glass reinforced polypropylene
Pressure gauge position	Onto the top cover
Connections	63/50mm union tailpieces
Drain	63mm, 63/50mm plumbing kit provided

TECHNICAL SPECIFICATIONS		
Filtration capacity m (8 h/day)	130	170
Max flow rate (m^3/h)	22.7	34.1
Filtration area (m^2)	9.3	14
Cartridge layers number	143	215
Filtration speed ($m^3/h/m^2$)	2.4	2.1
Filtration speed at 1 m/s	0,64 $m^3/h/m^2$	
Working pressure (bar or kg/cm^2)	0,2 - 0,8 (variable speed pump); 0,4 - 1,2 (single speed pump)	
Maximum pressure (bar ou kg/cm^2)	3.5	

9 317545 020525

CS 100

9 317545 020532

CS 150

HEAD LOSS CURVES

- CS filter head losses expressed in meters of water: 1 m H_2O = 0.1 bar

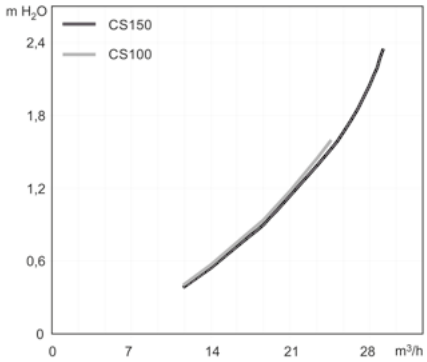

DIMENSIONS AND WEIGHT

	CS 100	CS 150
Footprint (filter foot diameter)	33 cm	
Overall height (with pressure gauge)	92 cm	
Needed clearance (to replace cartridge)	43 cm above the filter	
Weight (filter + cartridge)	14 kg	13 kg

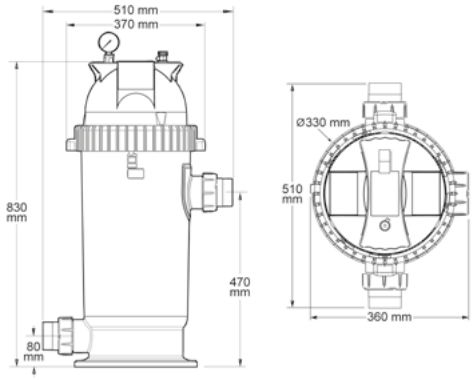

INSTALLATION WITH VERSA PLUMB® KIT

- Optional Versa Plumb® kit allows a quick, compact and efficient connection between CS filter and any Zodiac FloPro™ pump.
- The Versa Plumb® sweep elbow is equipped with a 1/2'' thread to install an earthing anode for example (see earthing anode kit in Water Treatment pages - part R0673800).

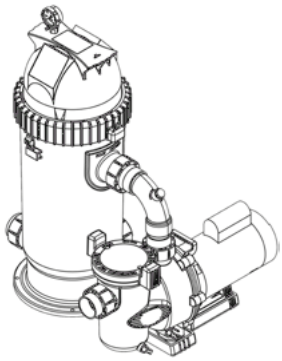

SPARE PARTS Spare parts p.306

OPTIONAL ACCESSORIES / ASSOCIATED PRODUCTS

	VersaPlumb® Kit	Cartridge CS 100	Cartridge CS 150
reference	WF000026	R0462201	R0462301

MS - Media filter

Filtration > Filters > MS

+ Easy to install
+ Efficient filtration
+ Easy maintenance

ALL TYPES OF SWIMMING POOLS

EASY INSTALLATION

MagnaPool ECOSYSTEM

3 YEAR WARRANTY

10 YEAR WARRANTY ON TANK

	MS 470	MS 530	MS 650	MS 800	MS 950
PRODUCT REFERENCE					
Standard model	WF000094	WF000095	WF000096	WF000097	WF000098

ACCESSORIES INCLUDED IN THE PACK

"Classic" multiport valve kit	Pressure gauge & air relief kit	Bolts kit	Media filling cap

DESCRIPTION	
Tank material	Fiberglass reinforced polyester
Multiport valve	6-way side mount valve (filtration, backwash, rinse, drain, circulation, closed)
Pressure gauge position	Onto the top cover using a T-shape adaptor threaded into the lid
Connections	All connections are threaded for an easy maintenance (multiport valve & piping)
Drain	3/8” cm (water) / 2 ½” (filter media, except for MS 470)

TECHNICAL SPECIFICATIONS					
Tank diameter (mm)	475	532	645	798	950
Max flow rate (m^3/h)*	8.0	10.2	15.8	23.3	30.0
Filtering area (m^2)	0.16	0.2	0.32	0.47	0.66
Diameter of threaded connections	1 ½”			2”	
Total weight of Crystal Clear	75	90	135	270	435
Nbr of bags - Crystal Clear 1.0/3.0 mm	1		2	3	5
Nbr of bags - Crystal Clear 0.7/1.3 mm	4	5	7	15	17
Total weight of sand	85	100	160	310	485
Working pressure (bar or kg/cm^2)	0,2 - 0,8 (variable speed pump); 0,4 - 1,4 (single speed pump)				
Maximum pressure (bar or kg/cm^2)	2.5				

* : For a 50 $m^3/h/m^2$ filtration speed

MS 470	MS 530	MS 650	MS 800	MS 950
9 317545 028354	9 317545 028361	9 317545 028378	9 317545 028385	9 317545 028392

DIMENSIONS AND WEIGHT

		MS 470	MS 530	MS 650	MS 800	MS 950
Clearance below valve*		310	320	375	390	420
A (mm)		340	350	405	430	460
B (mm)		465	475	530	660	690
C (mm)		529	539	594	736	766
D (mm)		705	745	815	984	1027
E external (mm)		475	532	645	798	950
E internal (mm)		450	510	635	770	920
F (mm)		347	400	490	625	705
Valve connections	Height spacing	64	64	64	76	76
	Width spacing	74	74	74	79	79
	Threaded ports	1½''	1½''	1½''	2''	2''
Complete filter net weight (kg)		15	18	21	36	58

* : Clearance below multiport valve elbow pipe to show clearance for pump installation

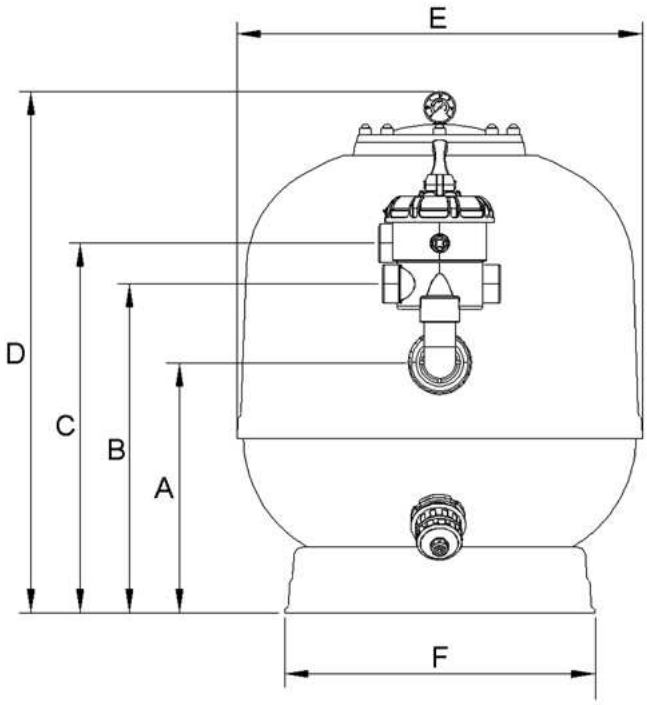

Spare parts p.308

ASSOCIATED PRODUCTS

	Crystal Clear 0,7/1,3 mm - Glass media	Crystal Clear 1,0/3,0 mm - Glass media
reference	WF000063	WF000064

Crystal Clear

+ Optimum filtration efficiency
+ Long lasting : lasts 3 times longer than sand
+ Eco-friendly : up to 75% water savings

ALL TYPES OF SWIMMING POOLS | FINE FILTRATION | ECO-FRIENDLY | MagnaPool™

	Crystal Clear 0,7/1,3 mm	Crystal Clear 1,0/3,0 mm
PRODUCT REFERENCE		
Standard model	WF000063	WF000064

DESCRIPTION	
Contents	Filtering medium made of 100% pure glass crystals
Form	Translucent
Dosage	Total weight in the filter : 10% less than the equivalent in sand 1,0/3,0mm : sufficient to cover the filter laterals 0,7/1,3 mm : in addtion, to make up the total weight
Filtration efficiency	77,9% turbidity reduction*
Bag dimensions (l x h)	45 x 65 cm
Bag net weight	15 kg (= shipping unit, skus can be mixed on a pallet)

ASSOCIATED PRODUCTS		
	MS filter	Hydroxinator® iQ
reference	WF000094/95/96/97/98	WW000172/173/174/175

* Turbidity reduction test carried in a lab using Crystal Clear fine under EN 16713-1 standard (test #7.2.4). Minimal regulatory requirement is 50%.

9 317545 025414
Crystal Clear 0,7/1,3 mm

9 317545 025421
Crystal Clear 1,0/3,0 mm

NL NICHELESS LED LIGHTS

Easy-to-install, eco-friendly lighting

Pool lighting is an essential asset for enhancing your pool.
Zodiac® NL LED lights enable you to achieve this and they are both **energy saving and easy to install.**
They are installed during the construction stage and enhance all pool types, **using innovative, obstruction-free technology.**

> LED LIGHTING: AN ENERGY-SAVING INNOVATION!

Energy efficient: powerful lighting with an **energy saving of up to 90%** (compared to incandescent or halogen spotlights).

Long lasting: they last up to 10 times longer than traditional incandescent light bulbs.

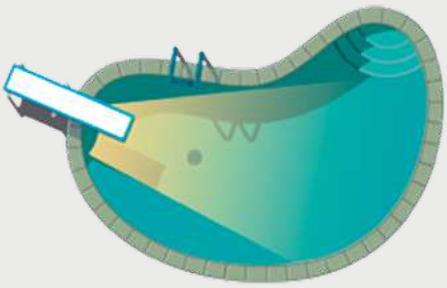

1 classic spotlight
Total consumption: 300 W
Annual cost = €37

ENERGY SAVING

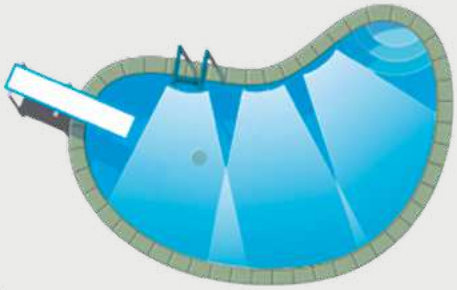

3 12 W NL LED lights
Total consumption: 27 W
Annual cost = 9 €

Higher performance lighting
90%
ENERGY SAVING

Calculation based on 4h/day usage throughout the season (6 months) at a price of €0.1694 / kWh (average price witn VAT in France)

> "NICHELESS" INSTALLATION: INSTALLED ANYWHERE, QUICKLY AND EASILY!

Quickly & easily: With Zodiac® NL LED lights, there's no need to build a niche, they slot directly into a standard 1.5" wall fitting and are compatible with all pool surfaces (liner/PVC, concrete, polyester, etc.).

Compact: They integrate perfectly into the pool, adding to its aesthetic appeal and are compatible with all pool cleaners (no obstructions jutting out from the wall).

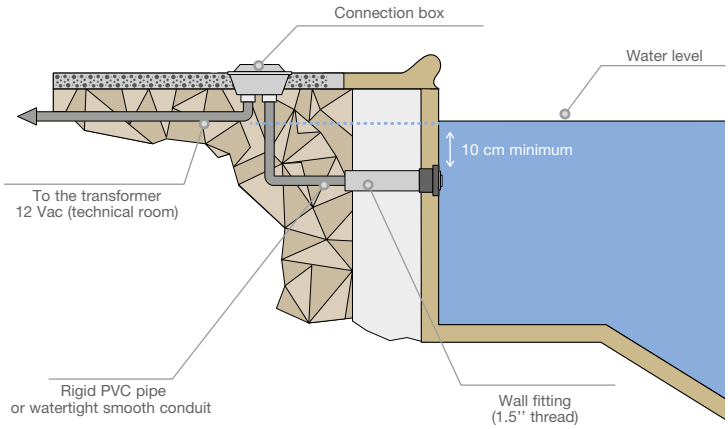

> COMPACT AND POWERFULL LIGHTS: CUSTOMISABLE AMBIANCE LIGHTING!

Freedom and creativity: NL LED lights offer **a wide range of set colors and ambiance lighting** thanks to their RGBW technology.

SET COLORS

- ALPINE WHITE
- SKY BLUE
- COBALT BLUE
- CARIBBEAN BLUE
- SPRING GREEN
- EMERALD GREEN
- EMERALD ROSE
- MAGENTA
- VIOLET

A sophisticated and relaxing atmosphere

An electric atmosphere with over 1,500 constantly changing colors

A star-shaped light show in red, white and blue

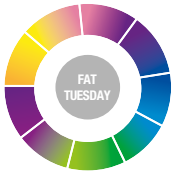

A carnival atmosphere with a 32-color display

A night brought to life by hundreds of colors

iAquaLink™ COMPATIBLE

Simple to use: 100% compatible with Zodiac® AquaLink® TRi automation and eXO® iQ smart salt water chlorinators (LS and standard versions) and Hydroxinator® iQ, NL LED lights can be controlled from your smartphone via the iAquaLink™ app.

DID YOU KNOW?

WITH RGBW LED, THERE'S NO NEED TO CHOOSE BETWEEN WHITE AND COLOR!

Zodiac® NL LED lights are innovative, using RGBW technology (Red-Green-Blue-White) to add white to all 3 primary colors.
This enables you to generate an infinite color pallet, with a more natural shade, or pure white lighting.

ZPCE: recommended sales price valid from 01/01/2020

NL - Leds

> Design > NL

3 YEAR WARRANTY

+ Perfect integration for an enhanced pool
+ Powerfull Led lighting
+ Guaranteed energy savings

EASY INSTALLATION | TECHNOLOGY RGBW | ENERGY SAVING | iAquaLink COMPATIBLE

	NL 6RGBW	NL 12RGBW	NL 24RGBW	NL 6BW	NL 12BW	NL 24BW
PRODUCT REFERENCE						
Standard model	WT000233	WT000234	WT000235	WT000236	WT000237	WT000238

ACCESSORIES INCLUDED IN THE PACK

Installation tool	White & grey cosmetic rings

DESCRIPTION

Installation Compatibility	Pool outlet with 1,5” internal thread and whithout internal reduction («suction cleaner» outlet type)	
Led Type	RGBW : color + white	Bright white
Operating Mode(s)	9 fixed colors & 5 multicolor lighting ambiances	1 fixed color : white
Color Choice*	Manual (on/off sequences) Remote control using iAquaLink™ smartphone app	
Use	Fresh water and salt water up to 6 g/L (6000 ppm)	

* : Needs eXO® iQ salt water chlorinator or AquaLink® TRi pool automation system.

TECHNICAL SPECIFICATIONS

Power	6 W	12 W	24 W	6 W	12 W	24 W
Max amperage (A)	0.52	0.92	1.25	0.62	1.09	1.84
Illuminated surface (m^2)*	12 to 15	15 to 20	20 to 24	12 to 15	15 to 20	20 to 24
Luminous flux (Lumen)	160	340	505	390	725	1180
Led lifespan **	10 000 h					
Protection rating	IP 68					
Power supply	12 VAC - 50/60 Hz					
Cable lenght	3 m					

* For a light colored pool finish. Reduce illuminated surface by roughly 20% for dark pool finishes.
** : Theoretical lifespan in hours, for information only.

POIDS ET DIMENSIONS

	NL 6RGBW	NL 12RGBW	NL 24RGBW	NL 6BW	NL 12BW	NL 24BW
External diameter (lens)	49,6 mm					
Light body diameter	36,7 mm					
Length A (without cable)	118 mm	143 mm		118 mm	143 mm	
Poids (with cable)	500 g	520 g		500 g	520 g	

ASSOCIATED PRODUCTS

	AquaLink® TRi	Hydroxinator® iQ	eXO® iQ
reference	WA000016	WW000172/173/174/175	WW000162/163/164/165/170/171

9 317545 059655
NL 6RGBW

9 317545 059662
NL 12RGBW

9 317545 059679
NL 24RGBW

9 317545 059686
NL 6BW

9 317545 059693
NL 12BW

9 317545 059709
NL 24BW

ZPCE: recommended sales price valid from 01/01/2020

> POWERFALL WATER BLADES

A water feature with soothing qualities

Water features and massage jets are now valued for both their relaxing and their aesthetic qualities. Compatible with all types of pool, **PowerFall water falls enhance the swimming pool and provide calm and well-being.**

> A TOP-OF-THE-RANGE TOUCH TO CUSTOMISE THE POOL

- The Zodiac® PowerFall water fall is available in **4 widths** to customise the pool, based on the size of the pool.
- **Simple to install when constructing the pool,** the water fall draws its supply directly from the return circuit from the filtration system and creates **a harmonious and soothing sound.**

DID YOU KNOW?

As the first water fall 100% made of ABS plastic, Zodiac(r) PowerFall stands out for its high quality and unalterable manufacturing (corrosion free).

Thanks to its patented X-Baffle® internal structure (item #2), the water fall is always constant and homogeneous whatever water flow is.

PowerFall lip is made of translucent plastic (item # 1).Thus, they harmonize perfectly with the design of the pool whatever the color of the pool surface.

X-Baffle® system

PowerFall

3 YEAR WARRANTY

+ Durable: 100% ABS plastic
+ X-Baffle system: consistent water flow
+ Aesthetic and qualitative improvement for pools

ALL TYPES OF SWIMMING POOLS

EASY INSTALLATION

	PowerFall 1' (30 cm)	PowerFall 18" (46 cm)	PowerFall 2' (61 cm)	PowerFall 3' (91 cm)
PRODUCT REFERENCE				
Standard model	WB000011	WB000008	WB000009	WB000010

OPTIMAL WATER FLOW FOR EACH ZODIAC® WATER FALL*	
Projection at 15 cm from the wall	5,5 m^3/h
Projection at 30 cm from the wall	7,0 m^3/h
Projection at 45 cm from the wall	11,5 m^3/h
Projection at 60 cm from the wall	15,0 m^3/h

* Required flow rate for the water fall projection from the pool wall at 1 m height.

PIPE SIZE MUST BE CORRECTLY CHOSEN ACCORDING TO FLOW RATE	
< 16 m^3 / hour	50 mm
≥ 16 m^3 / hour	63 mm

POWER / FLOW EQUIVALENCES REMINDER :	
3/4 CV	13 m^3/h
1 CV	16 m^3/h
1,5 CV	22 m^3/h
2 CV	30 m^3/h

INSTALLATION

Important: the water fall must not be installed at more than 1.2 m from the water level.

- 1 - Place a separate valve on each cascade. If the cascades are the same size and installed at the same height, construct a loop to balance water flow to all units.
- 2 - Prepare the notch where the water fall will be installed: For PowerFall cascades, make a notch in the bond beam about 11 cm deep and 2.5 cm longer than the cascade.
- 3 - Water fall placement: Create a bed of mortar in the notch to reinforce the base. Place the water fall in the mortar and ensure it is level.

1

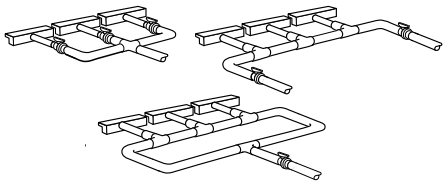

2

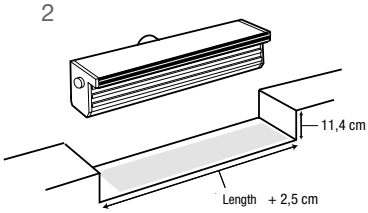

3

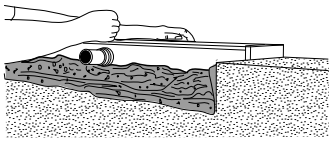

9 317545 026503
PowerFall 1'
(30 cm)

9 317545 019468
PowerFall 18"
(46 cm)

9 317545 019475
PowerFall 2'
(61 cm)

9 317545 019482
PowerFall 3'
(91 cm)

PROVIDED ACCESSORIES	
PVC Adapter M/F 1.5"/50mm	PVC Adapter F/F 1.5"/1.5"
W8620110	W8620111

Water treatment

INTRODUCTION **P.164**

DOSING SYSTEMS **P.165**
- pH Expert p.166
- Chlor Expert p.169

SALT WATER CHLORINATORS **P.171**
- Ei² p.172
- Ei² Expert p.174
- eXO® iQ p.178
- eXO® iQ LS p.180
- pH Link and Dual Link 2019 p.182

MAGNAPOOL® **P.184**
- Hydroxinator® iQ p.186
- MagnaPool® Minerals p.188
- Crystal Clear p.189

MINERAL PURIFIER **P.190**
- Nature² Spa p.191

> 5 RANGES OF WATER TREATMENT PRODUCTS

Water is an unstable and continually changing substance, particularly in a swimming pool. Physico-chemical treatment of the water is therefore necessary to make it healthy, clear, balanced, disinfected and antibacterial.

Zodiac® offers 5 product families to free swimming pool owners from the burdens of water treatment:

- **Stand-alone pH regulators** to provide the optimum pH whatever the type of disinfection used,
- **Stand-alone ORP regulators** to manage chlorine disinfection automatically,
- **Easy-to-Install, long-lasting and upgradeable salt chlorinators** (optional pH and ORP regulating modules on certain models), offered in 3 different levels of range,
- **Patented exclusive MagnaPool® solution** for a complete magnesium-based chlorination, focused on water clarity, bathing comfort and the environment (see specific pages),
- **Nature² mineral purifier - special Spas** for disinfection with less chlorine.

POSSIBLE COMBINATIONS OF THE DIFFERENT SYSTEMS

Disinfection

Water disinfection that adapts to every need and every budget.

Chlor Expert

Ei²

Ei² Expert

eXO® iQ

eXO® iQ LS

Hydroxinator® iQ

pH regulation and/or chlorination

The basis of water treatment, adapted to each Zodiac® disinfection or chlorinator solutions.

pH Expert

pH Link

Dual Link (pH/ORP)

MagnaPool® Mineral Pool Science

MagnaPool® is an exclusive, magnesium-based chlorinator solution for incomparably gentle, pure and crystal clear water and unequalled bathing comfort.

MagnaPool® minerals

+

Crystal Clear filtration glass

+

Hydroxinator® iQ

> pH REGULATION SYSTEMS
For perfect water balance

pH Expert incorporates proportional dosing technology to **maintain an ideal pH automatically** for the comfort of bathers. For optimal water balance, pH Expert includes a function to adjust injection cycles depending on the total alkalinity (TAC) of the water. **A choice of 3 settings is available:**

Low alkalinity	Standard alkalinity	High alkalinity
TAC < 10 °f (100 ppm $CaCO_3$)	Default setting	TAC > 15 °f (150 ppm $CaCO_3$)

> SAFE, AUTO-ADAPTIVE OPERATION

Depending on the value measured by the sensor, Zodiac® pH regulation systems automatically adjust the pH of the swimming pool up or down, using a peristaltic dosing pump.

The dosing time depends on **the difference between the pH of the swimming pool and the ideal pH (set point value).** The water balance in the swimming pool is maintained at the desired value without taking any action.

Zodiac® pH regulation systems are equipped **with an exclusive overdosing safety device** (called 'OFA') to prevent excessive injection. The safety device is adjustable and operates in 3 steps to determine whether or not it is necessary to inject correcting product.

EXCLUSIVE AUTO-ADAPTIVE DOSING

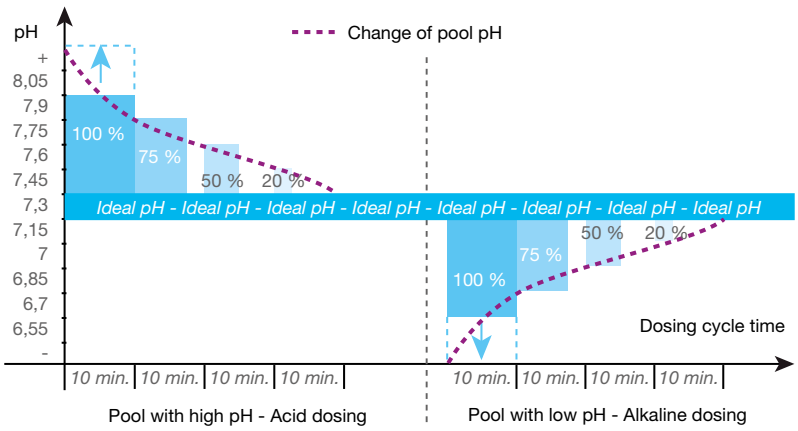

> FOR GREATER COMFORT

For the comfort of bathers, the pH of the swimming pool must be kept between 7.0 and 7.6:

- Below this, the water is aggressive.
- Above this, larger doses of disinfectant are needed to maintain healthy water and combat the growth of algae.
- The ideal pH for the swimming pool water is also the average pH of the human body, and more especially the blood, which is between 7.35 and 7.45.

pH SCALE

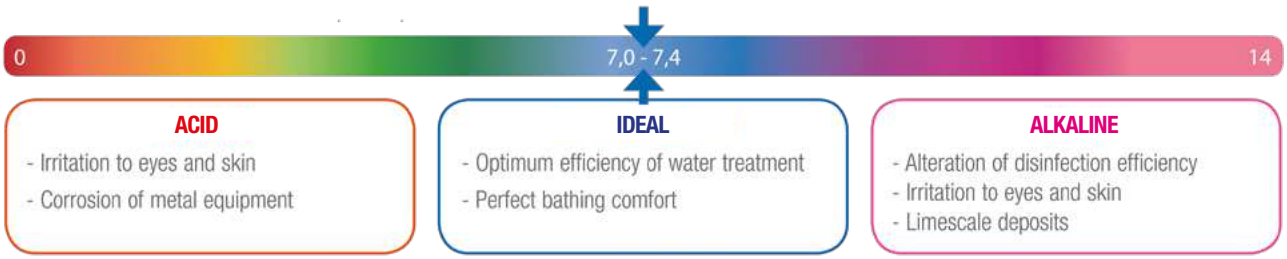

DID YOU KNOW?
The pH must be controlled and adjusted, whatever the disinfection system used. As a result, pH Expert can be used in all types of pools.

pH Expert

Water treatment > Automatical regulators > pH Expert

2 YEAR WARRANTY*

+ Automatic dosage of pH
+ Accurate dosing
+ Anti-overdose protection

ALL TYPES OF SWIMMING POOLS

EASY INSTALLATION

	pH Expert
PRODUCT REFERENCE	
Standard model	W500708

ACCESSORIES INCLUDED IN THE PACK

pH Sensor	Buffer solutions kit	Plumbing kit	Wall mounting kit	Suction Pipe

FOR WHICH POOL?	
Maximum volume of treated water	150 m^3
Dosage	Acid or alkaline
DESCRIPTION	
User Interface	1-line, backlit LCD screen
Languages	6 (FR-EN-ES-DE-IT-NL)
Calibration	Semi-automatic, 1 or 2 step(s) (Buffer solutions kit included)
Setpoints	Factory setting: pH = 7,4
Sensor position	Vertical
Safety	Configurable 'OFA' three-level over-feed alarm (settings from 0 to 6 h, default 4 h) Level sensor on intake pipe (equipped with anti-fumes cap)
TECHNICAL SPECIFICATIONS	
Sensor type (pH)	Combined sensor, simple-junction and simple-porous, Ø12 mm glass body
Reading scale	0,0 - 14,0 pH
Reading accuracy	0,1 pH
Sensor Tolerances	0-60 °C, water speed ≤ 2 m/s
Maximum counter pressure (injection point)	1,5 bar
Peristaltic pH pump flow	1,5 L/h
Fixing collar**	For 50 mm pipes (standard) or 63 mm (accessory)
Protection index	IP65
Size (l x h x p)	19,5 x 23,6 x 8,5 cm
Power supply	220-240 VAC / 50-60 Hz

* Excluding consumable parts that have 1 year warranty (buffer solutions, peristaltic tube, one-way valve)
** not needed if the "POD Kit" option is used.

3 478585 007085

pH Expert

INSTALLATION

- The sensor must be placed more than 30 cm before or after any elbow fittings (otherwise, use the Pod Kit)
- The sensor must be installed vertically (maximum tolerance: 45°) Its cable (BNC type) is 5 m long.
- It is recommended to ground the pool water, so as to avoid parasitic currents.

pH Expert installation diagram:

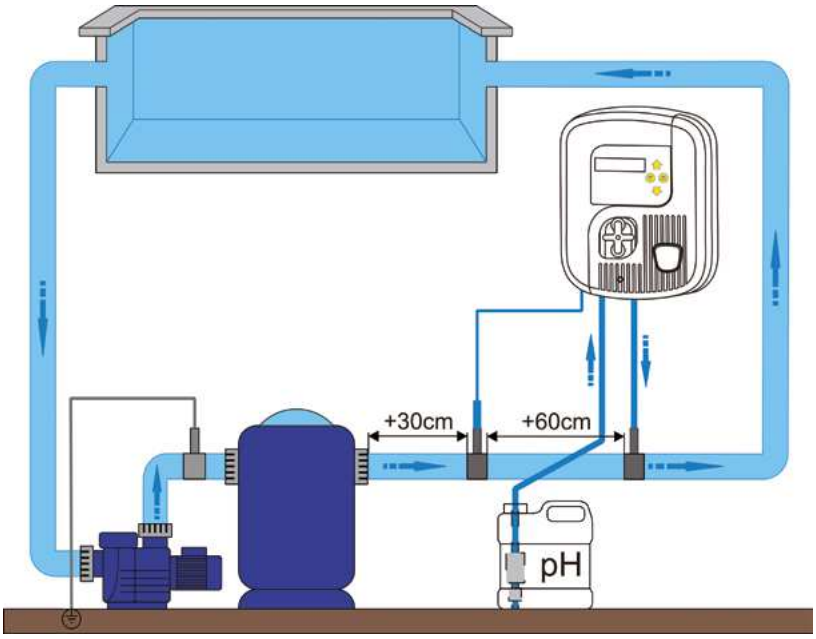

Spare parts p.312

PH VALUE IS ESSENTIAL TO MAINTAIN CHLORINE EFFECTIVENESS:

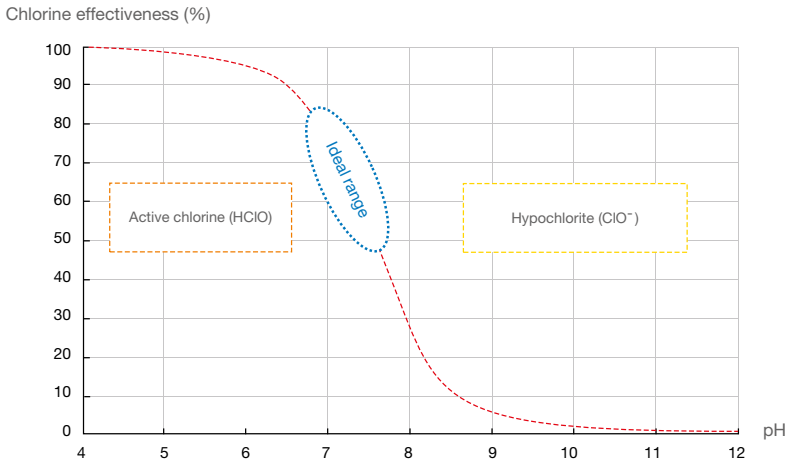

OPTIONAL ACCESSORIES (NOT INCLUDED)

	POD Kit	63mm saddle clamp	pH 4 and pH 7 buffer solutions (x6 + x6)	Earthing anode
reference	R0534900	R0839600	R0824400	R0673800

> ORP REGULATION SYSTEMS
For automated chlorination

Chlor Expert incorporates proportional dosing technology to **maintain an ideal chlorine level automatically** for the comfort of bathers.
It uses the "ORP" method (also called Redox), otherwise known as measuring the "disinfectant capacity of the water".

> SAFE, AUTO-ADAPTIVE OPERATION

Depending on the ORP value measured by the sensor, Zodiac® ORP regulation systems will automatically adjust the chlorine level using a peristaltic dosing pump.

The dosing time depends on **the difference between the ORP value of the swimming pool water and the optimum value (set point value).** The quantities of liquid chlorine injected are automatically adjusted to meet the demand for disinfection.

Zodiac® ORP regulation systems are equipped **with an exclusive overdosing safety device (called 'OFA') to prevent excessive injection.**
The safety device is adjustable and operates in 3 steps to determine whether or not it is necessary to inject liquid chlorine.

EXCLUSIVE AUTO-ADAPTIVE DOSING

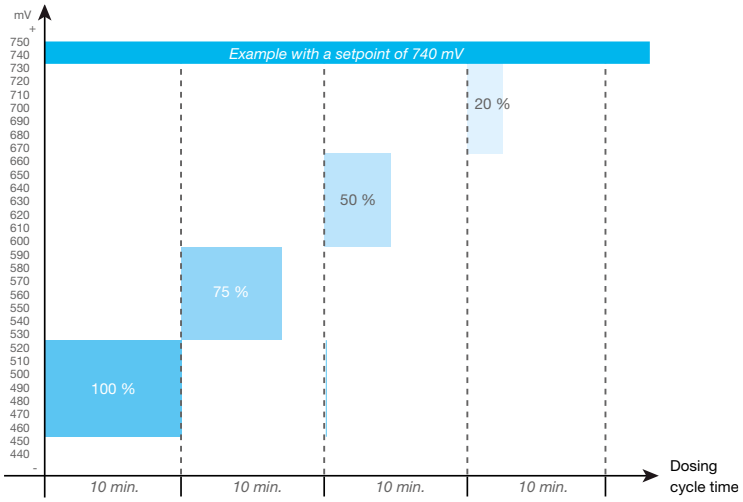

> FOR GREATER COMFORT

- For the comfort of bathers, the ORP level of the water must be between 600 mV and 750 mV; this is equivalent to about 1.0 mg/L free chlorine at pH 7.4 (variable depending on the stabiliser concentration).
- To maintain optimum water quality, the pH regulation system (pH Expert) is the essential partner to the ORP regulation system. **In this case the** 'PODkit' will be the ideal option for a simple installation and accurate measurement.

DID YOU KNOW?

ORP (and by extrapolation, the chlorine level) can vary depending on several parameters.

For optimum treatment, 5 values must be met:
- pH = 7.0 to 7.6
- TAC (alkalinity) = 8 to 15 °f (or 80 to 150 ppm $CaCO_3$)
- Cyanuric acid (stabilizer) < 30 ppm
- Water temperature = 20°C to 28°C
- Borehole water and rainwater prohibited

It is essential to check and adjust these parameters, as necessary, to ensure optimum operation of the ORP regulation system.

Chlor Expert

Water treatment > Automatical regulators > Chlor Expert

2 YEAR WARRANTY*

+ Automatic chlorine dosage
+ Accurate dosing
+ Anti-overdose protection

ALL TYPES OF SWIMMING POOLS

EASY INSTALLATION

Chlor Expert

PRODUCT REFERENCE

Standard model	W500709

ACCESSORIES INCLUDED IN THE PACK

ORP Sensor	Buffer solutions kit	Plumbing kit	Wall mounting kit	Suction Pipe

FOR WHICH POOL?

Maximum volume of treated water	20 - 150 m^3
Dosage	Liquid chlorine

DESCRIPTION

User Interface	1-line, backlit LCD screen
Languages	6 (FR-EN-ES-DE-IT-NL)
Calibration	Semi-automatic, 1 step (Buffer solutions kit included)
Setpoints	Factory setting : ORP = 650 mV
Sensor position	Vertical
Safety	Configurable 'OFA' three-level over-feed alarm (settings from 0 to 6 h, default 4 h) Level sensor on intake pipe (equipped with anti-fumes cap)

TECHNICAL SPECIFICATIONS

Sensor type ORP	Combined sensor, simple-junction and simple-porous, Ø12 mm glass body
Reading scale	0 - 1000 mV
Reading accuracy	10 mV
Sensor Tolerances	0-60 °C, water speed ≤ 2 m/s
Maximum counter pressure (injection point)	1,5 bar
Peristaltic pH pump flow	1,5 L/h
Fixing collar**	For 50 mm pipes (standard) or 63 mm (accessory)
Protection index	IP65
Size (l x h x p)	19,5 x 23,6 x 8,5 cm
Power supply	220-240 VAC / 50-60 Hz

* Excluding consumable parts that have 1 year warranty (ORP sensor, buffer solutions, peristaltic tube, one-way valve)
** not needed if the "POD Kit" option is used.

3 478585 007092

Chlor Expert

INSTALLATION

- The minimum pool volume required to Chlor Expert installation diagram use ORP treatment is 20 m³.
- The sensor must be placed more than 30 cm before or after any elbow fittings (otherwise, use the Pod Kit)
- The sensor must be installed vertically (maximum tolerance: 45°) Its cable (BNC type) is 5 m long.
- It is recommended to ground the pool water, so as to avoid parasitic currents.
- Chlorine stabiliser (cyanuric acid) concentration MUST BE LOWER THAN 30 ppm.

SPARE PARTS Spare parts p.314

Chlor Expert installation diagram

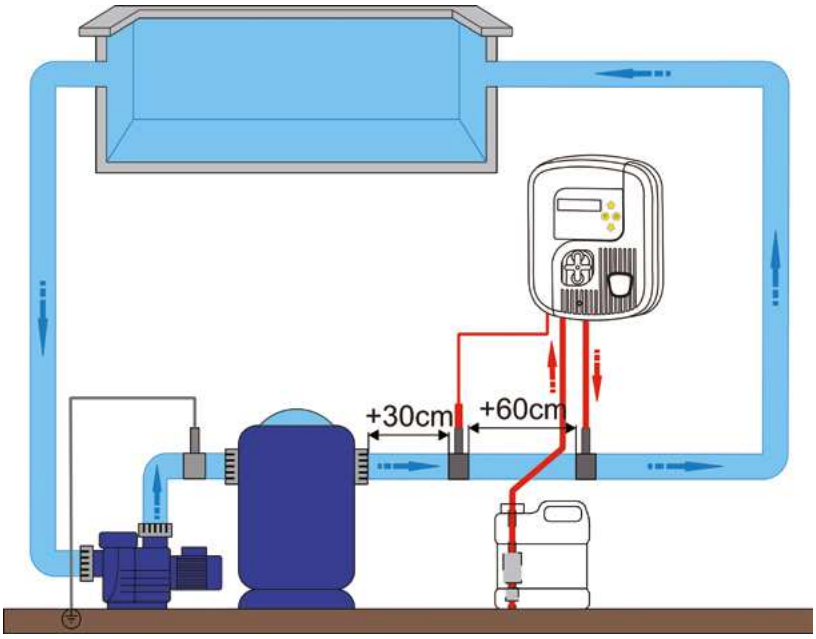

PH EFFECT ON ORP, AND INFLUENCE OF CHLORINE STABILIZER:

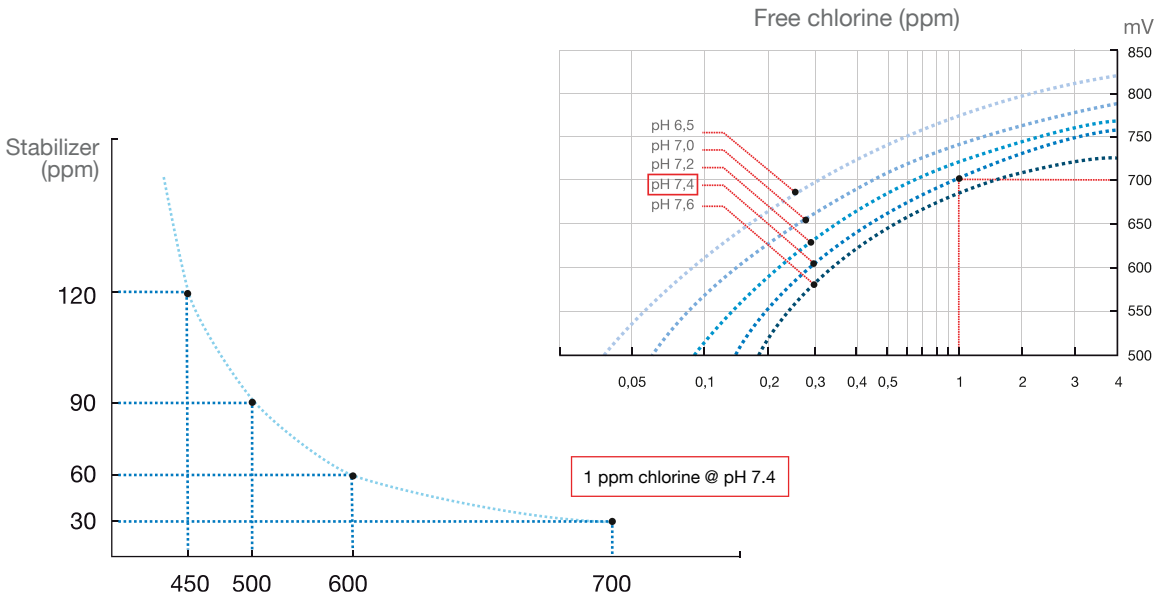

OPTIONAL ACCESSORIES (NOT INCLUDED)

	POD Kit	63mm saddle clamp	470 mV ORP buffer solutions (x6)	Earthing anode
reference	R0534900	R0839600	R0824500	R0673800

> SALT WATER CHLORINATORS
Automatic, easy and efficient disinfection

Simple to install and use, salt water chlorinators provide complete treatment with reduced maintenance.

> HOW DOES IT WORK?

The principle of salt electrolysis is simple. The swimming pool water is very slightly saline (from 2 to 4 g/L, meaning from 9 to 18 times less than sea water). By an electrolysis reaction across the cell of the system, chloride ions - from the salt dissolved in the water - are converted to chlorine gas, a powerful disinfectant that dissolves in the water instantaneously. **The resulting active chlorine (HOCl) destroys all the micro-organisms in the cell and provides an adequate level of free chlorine in the pool.** The active chlorine, which is removed by combining with organic matter and under the effect of UV rays in sunlight, is continuously renewed by the cell without action by the user.

For optimum efficiency of the chlorinator, **the pH of the swimming pool must be kept between 7.0 and 7.6.**
All Zodiac® chlorinators have cells with **high quality, long-lasting titanium electrodes,** ensuring peace of mind for the user.

CYCLIC REACTION OF SALT ELECTROLYSIS

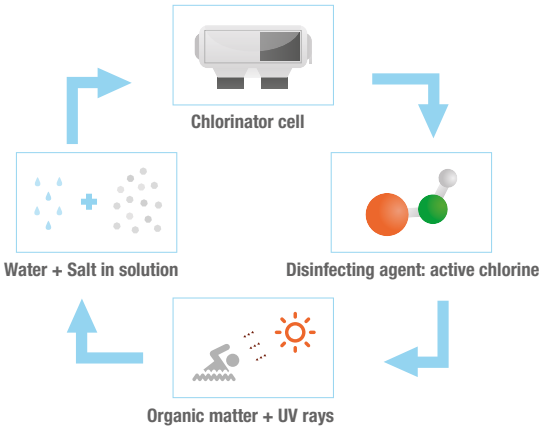

INCONDITIONNELLE GARANTIE INCONDITIONNELLE

REFERENCE POINT
Zodiac® control units and salt chlorinator cells will be repaired or exchanged during the guarantee period, whatever the causes of damage.

SELECTION GUIDE

	Ei²	Ei² Expert	eXO® iQ	eXO® iQ LS
Volume of water treated in m³ (temperate climate, filtration 8 h/day)	50 / 90 / 110	40 / 70 / 110	40 / 70 / 100 / 150	40 / 70
Chlorine production in g/h	12 - 20 - 25	10 - 18 - 25	10 - 18 - 22 - 35	10 - 18
Salinity in g/L (min… / required / …max)	3,0… / 4,0 / …10	3,0… / 4,0 / …10	3,3… / 4,0 / …13	1.6... / 2 / ...10
Cell type	Quick Fix	Quick Fix	Inverted U	Inverted U
Working life of cell*	7 500 h	7 500 h	10 000 h	10 000 h
Polarity inversion	5 h	3 / 5 / 7 h	2 to 8 h	2 to 8 h
Unit protection rating	IPX5	IPX5	IP43	IP43
LCD screen	N/A (Leds)	2 lines, backlit	4 lines, backlit	4 lines, backlit
Number of interface languages	N/A (Leds)	13	11	11
Boost mode / Low mode (= cover contact)		•	•	•
Programming clock (Timers)		•	•	•
User information	Leds	Messages	Messages + Leds	Messages + Leds
Flow rate detection	Gas sensor	Mechanical flow switch	Mechanical flow switch	Mechanical flow switch
Optional pH regulation module			pH Link 2019	pH Link 2019
Optional pH & ORP regulation module			Dual Link 2019	Dual Link 2019
Control using iAqualink™ app			•	•
Unconditional warranty (power pack)	2 years	2 years	3 years	3 years

* Under good operating conditions.

Ei²

Water treatment > Salt water chlorinators > Ei²

+ Long lasting
+ Suitable for all installations
+ Easy to install

ALL TYPES OF SWIMMING POOLS

EASY INSTALLATION

Ti22 TITANE INSIDE

Quick Fix

2 YEAR WARRANTY

UNCONDITIONAL WARRANTY UNCONDITIONAL

	Ei² 12	Ei² 20	Ei² 25
PRODUCT REFERENCE			
Standard model	WW000064	WW000065	WW000066

ACCESSORIES INCLUDED IN THE PACK

Installation Kit

FOR WHICH POOL?			
Volume of treated water (temperate climate, 8h/day filtration)	50 m³	90 m³	110 m³
Nominal chlorine production	12 g/h	20 g/h	25 g/h
Nominal output Amps	2,5 A	4,0 A	5,0 A
DESCRIPTION			
User Interface	Leds		
Operating modes	Normal		
Timer	Controlled by filtration timer		
Polarity reversal	Yes : 5 h		
Required salt level - minimum	4 g/L - 3,0 g/L minimum		
Safety	Low salt' indicator light: Reduced production to protect the electrode 'No flow' indicator light: Production is interrupted as long as conditions are not ideal		
Cell position	Horizontal or vertical		
Plumbing compatibility	DN50 mm, DN63 mm, 1 ½" (48 mm)		
TECHNICAL SPECIFICATIONS			
Working life of cells*	7 500 h (titanium plates, SC6 ruthenium coating)		
Electric power	70 W	110 W	140 W
Minimum flow rate (needed to purge air from the cell)	5 m³ / h		
Maximum flow rate (limited by pressure drops in the pipe)	18 m³/h (Bypass mandatory over this level)		
Maximum authorised cell pressure	2,75 bar (KPa)		
Maximum water temperature	40 °C		
Minimum water temperature	5 °C		
Length of the cell cable	1,8 m		
Protection index	IPX5		
Cell size (L x w x h)	16,5 x 22,5 x 12,5 cm		
Control box size (L x w x h)	28,5 x 40,5 x 12,5 cm		
Power supply	220-240 VAC / 50 Hz (mains power cable with moulded plug)		

* Under good operating conditions.

INSTALLATION

- With an IPX5 rating, the casing can be installed anywhere, including in the pool area (see IEC 60529 standard).
- The distance between the control unit and the cell is 1.5 m.
- The control unit MUST be linked to the filtration unit. Power supply is cut off when the filter pump is turned off.

Spare parts p.316

Ei² installation diagram:

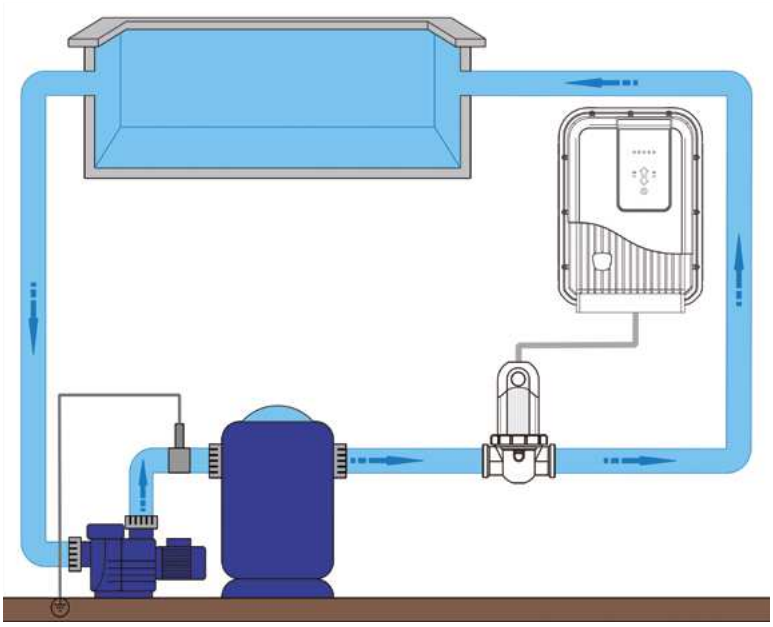

OPTIONAL ACCESSORIES (NOT INCLUDED)

	Locking ring wrench	Winterizing cap
reference	R0769900	R0770100

9 317545 019208
Ei² 12

9 317545 019215
Ei² 20

9 317545 019222
Ei² 25

Ei² Expert

Water treatment > Salt water chlorinators > Ei² Expert

+ Extreme durability
+ Suitable for all installations
+ Controlled chlorine production
+ Cover mode reducing automatically the chlorine output

ALL TYPES OF SWIMMING POOLS | EASY INSTALLATION | Ti22 TITANE INSIDE | QUICK FIX

2 YEAR WARRANTY

UNCONDITIONNAL WARRANTY UNCONDITIONNAL

	Ei² Expert 10	Ei² Expert 18	Ei² Expert 25
PRODUCT REFERENCE			
Standard model	WW000061	WW000062	WW000063

ACCESSORIES INCLUDED IN THE PACK

Installation Kit	Flow switch installation kit

FOR WHICH POOL?			
Volume of treated water (temperate climate, 8h/day filtration)	40 m³	70 m³	110 m³
Nominal chlorine production	10 g/h	18 g/h	25 g/h
Nominal output Amps	2,0 A	3,6 A	5,0 A

DESCRIPTION	
User Interface	2-line, backlit LCD screen
Languages	13 (FR-EN-DE-ES-IT-NL-PT-AF-CZ-SL-HU-SW-TR)
Operating modes	Summer, Winter, Boost (100%), Low (cover mode 10%)
Timer	24h clock / 2 timers
Polarity reversal	Yes : 3, 5 or 7 h (Factory setting= 5 h)
Required salt level - minimum	4 g/L - 3,0 g/L minimum
Safety	Low salt' indicator light: Reduced production to protect the electrode 'No flow' indicator light: Production is interrupted as long as conditions are not ideal
Cell position	Horizontal or vertical
Plumbing compatibility	DN50 mm, DN63 mm, 1 ½" (48 mm)

TECHNICAL SPECIFICATIONS			
Working life of cells*	7 500 h (titanium plates, SC6 ruthenium coating)		
Electric power	60 W	100 W	140 W
Minimum flow rate (needed to purge air from the cell)	5 m³ / h		
Maximum flow rate (limited by pressure drops in the pipe)	18 m³/h (Bypass mandatory over this level)		
Maximum authorised cell pressure	2,75 bar (KPa)		
Maximum water temperature	40 °C		
Minimum water temperature	5 °C		
Length of the cell cable	1,8 m		
Protection index	IPX5		
Cell size (L x w x h)	16,5 x 22,5 x 12,5 cm		
Control box size (L x w x h)	28,5 x 40,5 x 12,5 cm		
Electric power supply	220-240 VAC / 50 Hz (mains power cable with moulded plug)		

* Under good operating conditions.

INSTALLATION

- With an IPX5 rating, the casing can be installed anywhere, including in the pool area (see IEC 60529 standard).
- The distance between the control unit and the cell is 1.5 m.
- The control unit should be permanently connected to an electrical source (by using internal timers).

Spare parts p.318

Ei² Expert installation diagram:

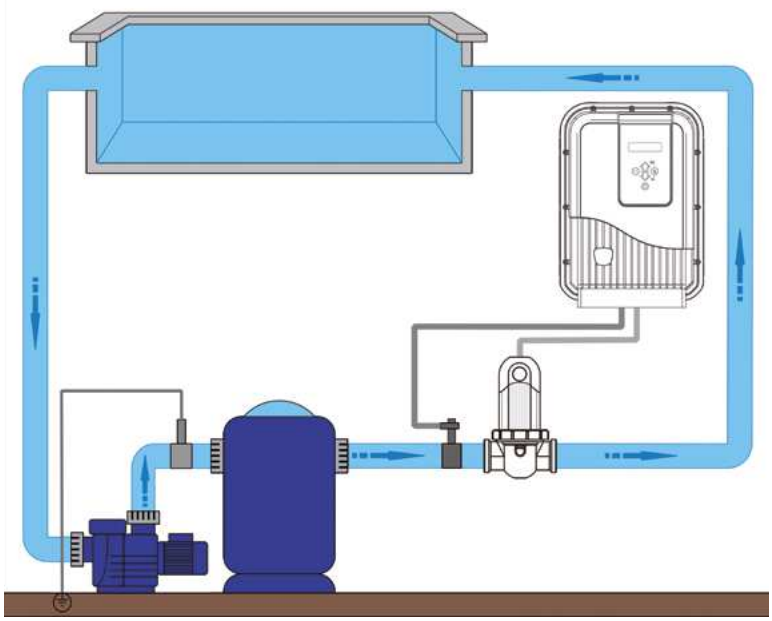

OPTIONAL ACCESSORIES (NOT INCLUDED)

	Locking ring wrench	Winterizing cap
reference	R0769900	R0770100

9 317545 019178
Ei² Expert 10

9 317545 019185
Ei² Expert 18

9 317545 019192
Ei² Expert 25

> eXO® iQ & eXO® iQ LS

WATER CONTROL WITH A DOSE OF SERENITY

The eXO® salt water chlorinator solutions

The eXO® platform is an efficient and automatic disinfection solution. Easy to use, it offers complete water treatment, controlling the pool's equipment for optimal water quality.

eXO® iQ

eXO® iQ LS

All-in-one control
All water quality control is centralised in a single interface: pH, chlorination, additional equipment (filter pump, lighting…).

Peace of mind
With its long-lasting electrode and high-quality sensors, the eXO® solution offers optimal water quality all the time. As proof of reliability, the chlorinator comes with a 3-year unconditional warranty[1].

Built-in Wi-Fi
The iAquaLink™ app allows you to have remotely and real-time control of your water quality and your pool's equipment[2] from you smartphone or tablet.

[1] 3 years unconditional (device), 2 years (pH sensor), 1 year (ORP sensor)
[2] Connected to the eXO® solution.

> HYDROXINATOR® iQ

INCOMPARABLY GENTLE, PURE AND CRYSTAL CLEAR WATER

Exclusive magnesium-based chlorinator solution

This solution combines the properties of MagnaPool® magnesium-based minerals with an exceptionally fine filtration system for a natural and incomparably crystal clear water.

Hydroxinator® iQ

Gentle water for skin and eyes
MagnaPool® naturally slows the development of chloramines, so you can enjoy gentle water without unpleasant smells or skin and eyes irritation.

A pure crystal clear swimming pool
MagnaPool® provides exceptionally clear water without adding any sanitizing chemicals.

Environmentally- friendly water treatment
Crystal Clear filter media for MagnaPool® swimming pools consists of thousands of pure glass crystals. It is not receptive to bacteria and only requires a short filter backwash.

> A UNIQUE INTERFACE FOR PERFECT CONTROL

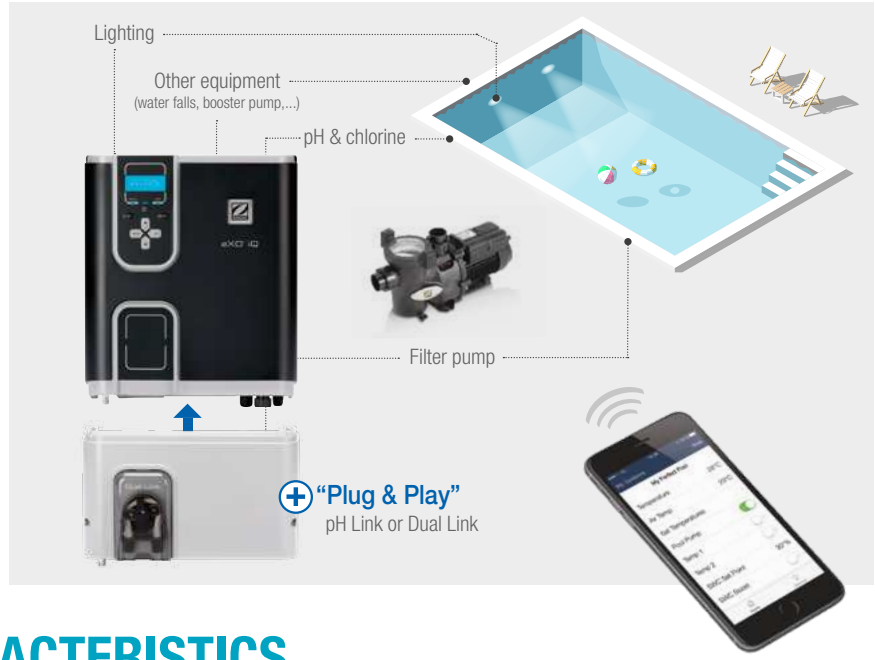

> TECHNICAL CARACTERISTICS

	eXO® iQ	eXO® iQ LS	Hydroxinator® iQ
Maximum volume treated (temperate climate with water up to 28°C, disinfection capacity linked to the daily filtration time, here for 8hrs/day)	150 m^3	70 m^3	150 m^3
Treatment type	Salt water chlorination	Salt water chlorination Low Salinity	MagnaPool® Magnesium mineral chlorination
Recommended concentration (measured in the water)	4 g/L	2 g/L	4 g/L

Optional pH regulation	pH Link "Plug & Play" module
Optional pH and ORP regulation	Dual Link "Plug & Play" module

Wireless and remote-controllable	Built-in Wi-Fi Dedicated Android & iOS smartphone app
Boost mode	24hr shock chlorination
Cover mode	Reduced chlorination when the electric cover is closed Automatic or manual activation (0 to 30% adjustable chlorination output)
Water temperature indicator	Yes, with cell protection function
Equipment control	3 programmable equipment: - Filter pump: simple or variable speed (Zodiac®) - 2 other accessories: lighting, booster pump...
Security – Low water flow sensor	Mechanical flow switch
Self-cleaning cell (polarity reversal)	Adjustable every 2 to 8 hours (allows to adpat the cell revesal to water hardness)
Warranty – Device	3 years, unconditional
Warranty – Sensors	2 years (pH sensor) / 1 year (ORP sensor)

eXO® iQ

Water treatment > Salt water chlorinators > eXO® iQ

3 YEAR WARRANTY

UNCONDITIONNAL WARRANTY UNCONDITIONNAL

+ All-in-one control: all water quality control is centralised in a single interface (pH, chlorination, equipment…)
+ Peace of mind: long lasting electrodes, high-end sensors
+ Built-in Wi-Fi: Wi-Fi connexion to the iAquaLink™ app

ALL TYPES OF SWIMMING POOLS | UPGRADABLE SYSTEM | Ti 22 TITANE INSIDE | iAquaLink CONTROL

	eXO® iQ 10	eXO® iQ 18	eXO® iQ 22	eXO® iQ 35
PRODUCT REFERENCE				
Standard model	WW000162	WW000163	WW000164	WW000165

ACCESSORIES INCLUDED IN THE PACK

Wall mounting kit	Flow switch kit	Temperature sensor kit	Reducing bushes kit	Free App

FOR WHICH POOL?				
Volume of treated water (temperate climate, 8h/day filtration)	40 m³	70 m³	100 m³	150 m³
Nominal Chlorine production	10 g/h	18 g/h	22 g/h	35 g/h
Nominal output Amps	2,8 A	3,6 A	5,0 A	7,2 A

DESCRIPTION	
User Interface	4-line, backlit LCD screen
Languages	11 (FR-EN-DE-ES-IT-NL-PT-CZ-SL-HU-SW)
Operating modes	Normal, Boost (100 %); Low (Adjustable cover mode from 0 to 30 %)
Equipment control	Single speed or Zodiac variable speed filter pump 2 additional equipment (lighting, booster pump…)
Timer	24 h clock / 2 chlorination timers 2 single speed or 4 Zodiac variable speed filter pump timers 1 timer per additional equipment
Polarity reversal	Yes: adjustable from 2 to 8h (Factory setting= 5h)
Required salt level - minimum	4 g/L - 3,3 g/L minimum
Safety	Temperature sensor: Chlorine production lowered in case of cold water to protect the electrode 'Low salt' indicator light: Reduced production to protect the electrode 'No flow' message: Production is interrupted as long as conditions are not ideal Mechanical flow switch
Cell position	Horizontal
Plumbing compatibility	DN50 mm, DN63 mm, 1 ½" (48 mm)

9 317545 026237	9 317545 026251	9 317545 026275	9 317545 026299
eXO® iQ 10	eXO® iQ 18	eXO® iQ 22	eXO® iQ 35

TECHNICAL SPECIFICATIONS

Working life of cells*	10 000 h (titanium plates, SC6 ruthenium coating)
Electric power	Max 200 W
Minimum flow rate (needed to purge air from the cell)	5 m^3 / h
Maximum flow rate (limited by pressure drops in the pipe)	18 m^3/h (Bypass mandatory over this level)
Maximum authorised cell pressure	2,75 bar (KPa)
Maximum water temperature	40 °C
Minimum water temperature	5 °C
Length of the cell cable	1,8 m
Protection index	IP43
Cell size (L x w x h)	32,0 x 13,5 x 11,0 cm
Control box size (L x w x h)	32,0 x 37,0 x 12 cm
Power Supply	220-240 VAC / 50-60 Hz

*Under good operating conditions.

INSTALLATION

- The control unit is installed in the plant room or beneath a shelter.
- The distance between the control unit and the cell is 1.5 m (the cell cable is 1.8 m long)
- The control unit should be permanently connected to an electrical source (by using internal timers)

SPARE PARTS Spare parts p.320

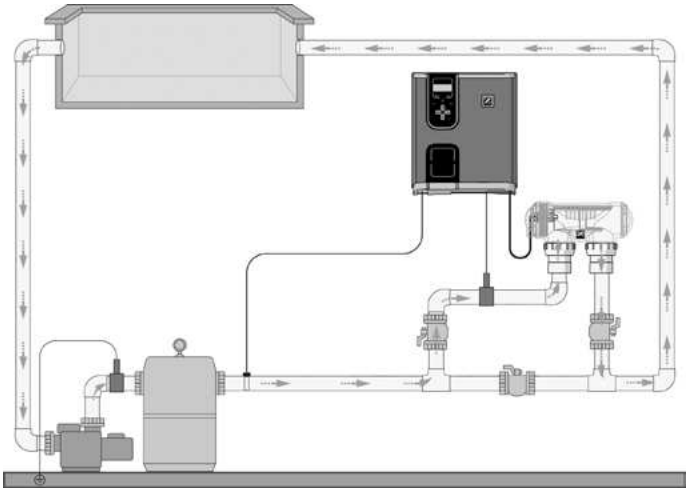

ASSOCIATED PRODUCTS

pH Link Module 2019	Dual Link Module 2019
WW000176	WW000177

eXO® iQ LS

Water treatment > Salt water chlorinators > eXO® iQ LS

3 YEAR WARRANTY

UNCONDITIONNAL WARRANTY UNCONDITIONNAL

+ Low salinity chlorinator
+ All-in-one control: all water quality control is centralised in a single interface (pH, chlorination, equipment…)
+ Built-in Wi-Fi: Wi-Fi connexion to the iAquaLink™ app

LOW SALT | Ti22 TITANE INSIDE | UPGRADABLE SYSTEM | iAquaLink CONTROL

	eXO® iQ LS 10	eXO® iQ LS 18
PRODUCT REFERENCE		
Standard model	WW000170	WW000171

ACCESSORIES INCLUDED IN THE PACK

Wall mounting kit	Flow switch kit	Temperature sensor kit	Reducing bushes kit	Free App

FOR WHICH POOL?		
Volume of treated water (temperate climate, 8h/day filtration)	40 m³	70 m³
Nominal Chlorine production	10 g/h	18 g/h
Nominal output Amps	2,8 A	3,6 A

DESCRIPTION	
User Interface	4-line, backlit LCD screen
Languages	11 (FR-EN-DE-ES-IT-NL-PT-CZ-SL-HU-SW)
Operating modes	Normal, Boost (100 %); Low (Adjustable cover mode from 0 to 30 %)
Equipment control	Single speed or Zodiac variable speed filter pump 2 additional equipment (lighting, booster pump…)
Timer	24 h clock / 2 chlorination timers 2 single speed or 4 Zodiac variable speed filter pump timers 1 timer per additional equipment
Polarity reversal	Yes: adjustable from 2 to 8h (Factory setting= 5h)
Required salt level - minimum	2 g/L - 1,6 g/L minimum
Safety	Temperature sensor: Chlorine production lowered in case of cold water to protect the electrode 'Low salt' indicator light: Reduced production to protect the electrode 'No flow' message: Production is interrupted as long as conditions are not ideal Mechanical flow switch
Cell position	Horizontal
Plumbing compatibility	DN50 mm, DN63 mm, 1 ½" (48 mm)

9 317545 026398
eXO® iQ LS 10

9 317545 026411
eXO® iQ LS 18

TECHNICAL SPECIFICATIONS

Working life of cells*	10 000 h (titanium plates, SC6 ruthenium coating)
Electric power	Max 200 W
Minimum flow rate (needed to purge air from the cell)	5 m^3 / h
Maximum flow rate (limited by pressure drops in the pipe)	18 m^3/h (Bypass mandatory over this level)
Maximum authorised cell pressure	2,75 bar (KPa)
Maximum water temperature	40 °C
Minimum water temperature	5 °C
Length of the cell cable	1,8 m
Protection index	IP43
Cell size (L x w x h)	32,0 x 13,5 x 11,0 cm
Control box size (L x w x h)	32,0 x 37,0 x 12 cm
Power Supply	220-240 VAC / 50-60 Hz

*Under good operating conditions.

INSTALLATION

- The control unit is installed in the plant room or beneath a shelter.
- The distance between the control unit and the cell is 1.5 m (the cell cable is 1.8 m long)
- The control unit should be permanently connected to an electrical source (by using internal timers)

SPARE PARTS **Spare parts p.320**

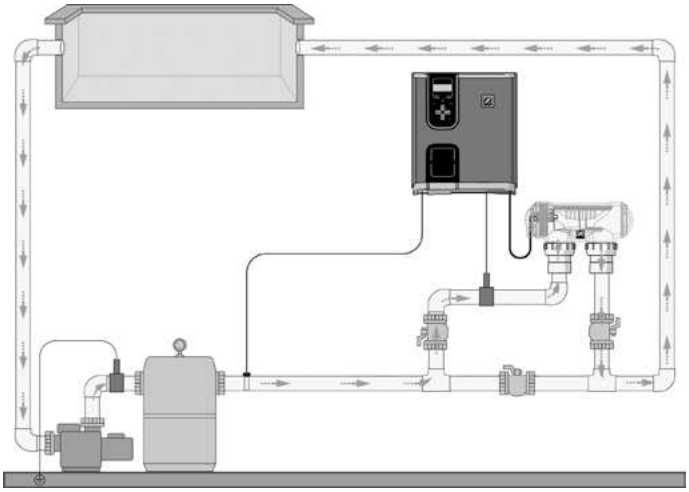

ASSOCIATED PRODUCTS

pH Link Module 2019	Dual Link Module 2019
WW000176	WW000177

pH Link & Dual Link

Water treatment > Salt water chlorinators > pH Link & Dual Link

2 YEAR WARRANTY*

+ Fully integrated disinfection and dosing system
+ Automatic regulation
+ Accurate & easy reading (POD Kit)

ALL TYPES OF SWIMMING POOLS | EASY INSTALLATION | MagnaPool ECOSYSTEM

	pH Link	Dual Link
PRODUCT REFERENCE		
Standard model	WW000176	WW000177

ACCESSOIRES INCLUS DANS LE PACK

pH Sensor	ORP sensor	pH 4 and pH 7 buffer solutions x3	470 mV ORP buffer solutions x3	22 mm hole saw	Plumbing kit	POD Kit

FOR WHICH POOL?		
Maximum volume of treated water	150 m^3	Depending on the chlorinator's output power
Dosage	Acid	

DESCRIPTION	
User Interface	Device's interface (4-line, backlit LCD screen)
Calibration	Semi-automatic at 2 points pH 4 and pH 7 & ORP 470 mV (buffer solutions included)
Setpoints	Factory setting: pH = 7,2 / ORP = 700 mV
Sensor position	Vertical, on the POD (provided)
Safety	Overdosing safety, low measures, unplugged sensor, broken sensor (pH Link)

TECHNICAL SPECIFICATIONS		
Sensor type (pH) or (pH and ORP)	Combined sensor, simple-junction and simple-porous, Ø12 mm glass body	
Reading scale	0,0 -12,0 pH	100 - 1000 mV
Reading accuracy	0,1 pH	10 mV
Sensor Tolerances	0-60 °C, water speed ≤ 2 m/s	
Maximum counter pressure (injection point)	1,5 bar	
Peristaltic pH pump flow	1,2 L/h	
Cell size (L x w x h)	30,5 x 18,1 x 11,5 cm	

* Excluding consumable parts that have 1 year warranty (ORP sensor, buffer solution, peristaltic tube, one-way valve)

9 317545 026152
pH Link

9 317545 026169
Dual Link

INSTALLATION

- Connect the unit directly to the chlorinator's control unit.
- The distance between the module and the sensor cell is 1,5m (3 m extension cable is optional).
- The POD MUST be installed so that the sensor(s) is/are vertical, to ensure accurate measurement.

pH Link & Dual Link Modules installation diagram:

Kit POD on line:

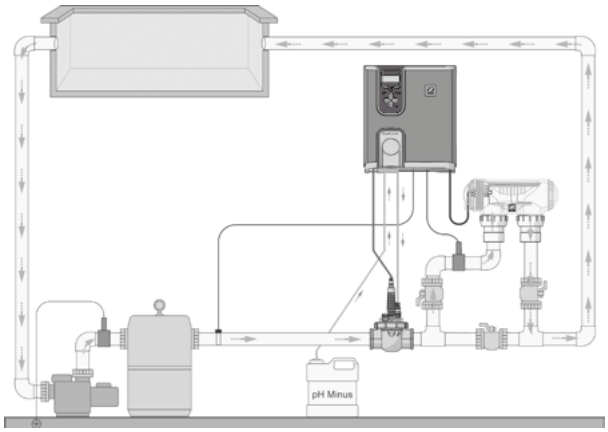

POD Kit in by-pass:

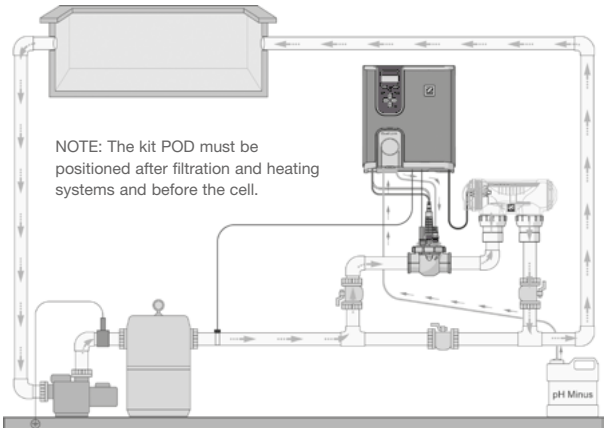

SPARE PARTS **Spare parts p.322**

OPTIONAL ACCESSORIES (NOT INCLUDED)

	Intake pipe	pH 4 and pH 7 buffer solutions (x6 + x6)	470 mV ORP buffer solutions (x6)	Winterizing cap	3m BNC cable extension	Earthing anode
reference	R0808000	R0824400	R0824500	R0770100	R0635800	R0673800

> PATENTED MAGNESIUM WATER TREATMENT

For incomparably gentle, crystal clear water

The patented MagnaPool® solution combines the clarifying properties of magnesium with a filtration system of exceptional quality, for a perfectly healthy and balanced, mineral-enriched swimming pool.

> HOW DOES IT WORK?

The MagnaPool® solution combines natural minerals, magnesium and potassium (diluted in the pool), to purify the water while providing an incomparable bathing exerience.

This water treatment solution naturally converts magnesium minerals to magnesium hydroxide, a gentle and silky substance that acts as a clarifier in order to retain all the impurities, even the finest, in the water. Without impurities, bacteria no longer grow and are removed from the pool.

The MagnaPool® Hydroxinator® iQ then generates non-synthetic (or inorganic) chlorine: **this phenomenon is hydroxination.** The resulting chlorine, without addition of chemical products, protects the integrity and quality of the water, without harming the environment in which it is used.

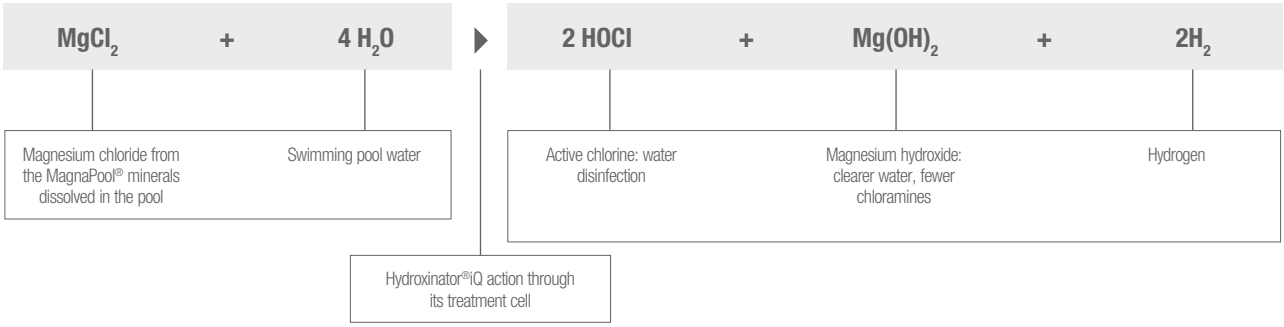

DID YOU KNOW?
MagnaPool® minerals do not contain any sodium chloride («salt» or NaCl). The MagnaPool® minerals do not produce soda, a very basic element that affects negatively the water balance.

STANDARD INSTALLATION

The patented MagnaPool® solution comprises a Hydroxinator® iQ with its treatment cell, Crystal Clear glass filter medium and MagnaPool® minerals. Each of these elements is needed for the MagnaPool® solution to function; they cannot be sold separately.

To obtain a complete MagnaPool® eco-system, the assembly can be combined with the MS filter and a Zodiac® variable speed pump.

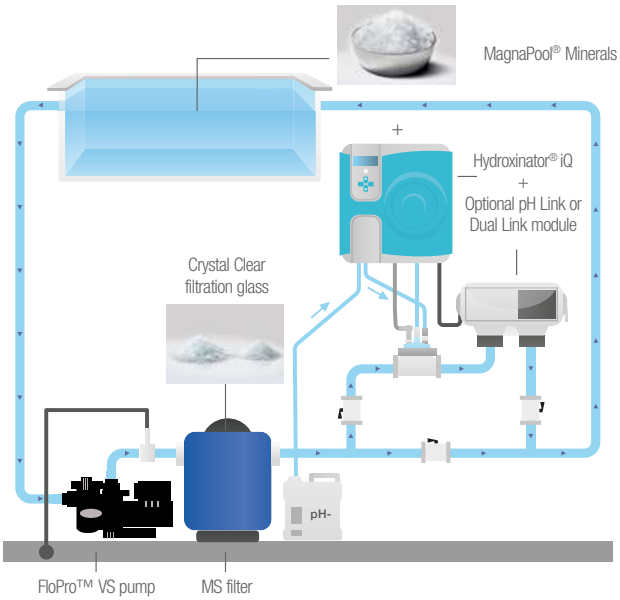

MagnaPool ECOSYSTEM

REFERENCE POINT
The MagnaPool® solution comprises the Hydroxinator® iQ, MagnaPool® minerals and the Crystal Clear filtration crystals.
Zodiac® equipment is compatible with and/or additional to the MagnaPool® system.
Identify all the products in the MagnaPool® ecosystem using this pictogram.

> THE BENEFITS OF THE MAGNAPOOL® SOLUTION

A PURE, CRYSTAL CLEAR SWIMMING POOL

MagnaPool® provides exceptionally clear water without adding chemical disinfection products.
This intense clarity is made possible by combining two innovative factors. Firstly, the powerful natural clarifying properties of magnesium in MagnaPool® minerals.
And secondly, exceptionally fine filtration using Crystal Clear filtration media.

Mg 12 24
Mineral Pool Science

GENTLE WATER FOR SKIN AND EYES

Compared with conventional water treatment systems (manual chlorine addition or salt electrolysis + sand filter), MagnaPool® naturally slows the development of chloramines, molecules that can cause an unpleasant chlorine smell and eye or skin irritation.

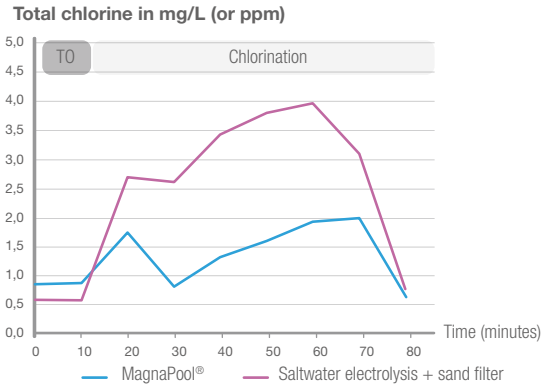

Zodiac laboratory measurement of chloramines (or combined chlorine) after adding organic matter to two pools at the same time, one treated with salt electrolysis + sand filter and the other with MagnaPool®.

ECO FRIENDLY

ENVIRONMENTALLY-FRIENDLY WATER TREATMENT

Crystal Clear filter media for MagnaPool® swimming pools consist of thousands of pure glass crystals. Unlike sand, it is not receptive to bacteria and only requires a short filter backwash.
Thus, water consumption is reduced by up to 75%.

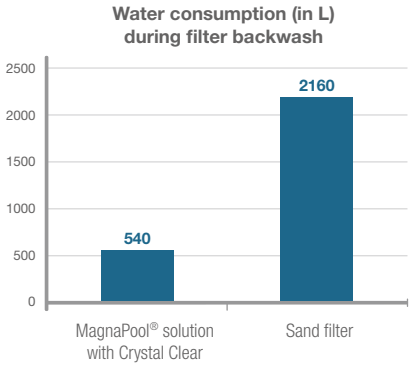

Value for a pool equipped with a 640 mm filter and a 1.0 HP (or 0.75 kW) pump.

DID YOU KNOW?
Magnesium takes part in more than 300 enzymatic reactions and cell growth in the human body, such as nerve transmission, skin renewal and cell relaxation.
The chlorophyll molecule, basic plant component, is formed around a magnesium atom.

Hydroxinator® iQ

Water treatment > MagnaPool® > Hydroxinator® iQ

3 YEAR WARRANTY

UNCONDITIONNAL WARRANTY UNCONDITIONNAL

+ Unrivalled swimming comfort
+ Crystal-clear water: clarifying effect of magnesium and glass media
+ Eco-friendly: use less water and energy, fewer chemical additives
+ Upgradable: optional pH regulation (pH Link) or pH and ORP regulation module (Dual Link)

ALL TYPES OF SWIMMING POOLS · UPGRADABLE SYSTEM · iAquaLink CONTROL · Ti 22 TITANE INSIDE · MagnaPool ECOSYSTEM · ECO-FRIENDLY

	Hydroxinator® iQ 10	Hydroxinator® iQ 18	Hydroxinator® iQ 22	Hydroxinator® iQ 35
PRODUCT REFERENCE				
Standard model	WW000172	WW000173	WW000174	WW000175

ACCESSORIES INCLUDED IN THE PACK

Wall mounting kit	Flow switch kit	Temperature sensor kit	Reducing bushes kit	Free App

	Hydroxinator® iQ 10	Hydroxinator® iQ 18	Hydroxinator® iQ 22	Hydroxinator® iQ 35
FOR WHICH POOL?				
Volume of treated water (temperate climate, 8h/day filtration)	40 m³	70 m³	100 m³	150 m³
Nominal Chlorine production	10 g/h	18 g/h	22 g/h	35 g/h
Nominal output Amps	2,8 A	3,6 A	5,0 A	7,2 A

DESCRIPTION	
User interface	4-line, backlit LCD screen
Languages	11 (FR-EN-DE-ES-IT-NL-PT-CZ-SL-HU-SW)
Operating modes	normal, Boost (100 %); Low (Adjustable cover mode from 0 to 30 %)
Equipment Control	Single speed or Zodiac variable speed filtration pump 2 additional equipment (lighting, booster pump…)
Clock / Timer	24 h clock / 2 chlorination timers 2 single speed or 4 Zodiac variable speed filter pump timers 1 timer per additional equipment
Polarity reversal	Yes: adjustable from 2 to 8h (Factory setting= 5h)
Recommended minerals rate - minimum*	4 g/L - 3,3 g/L minimum
Safety Features	Temperature sensor: Chlorine production lowered in case of cold water to protect the electrode 'Low salt' indicator light: Reduced production to protect the electrode 'No flow' message: Production is interrupted as long as conditions are not ideal Mechanical flow switch
Cell Position	Horizontal
Plumbing compatibility	DN50 mm, DN63 mm, 1 ½" (48 mm)

* Mineral levels are measured using the usual salinity testers. Add 5 x 10kg bags per 10 m³ to measure a concentration of 4 g/L (4000 ppm).

9 317545 026435	9 317545 026459	9 317545 026138	9 317545 026145
Hydroxinator® iQ 10	Hydroxinator® iQ 18	Hydroxinator® iQ 22	Hydroxinator® iQ 35

TECHNICAL SPECIFICATIONS

Working life of cells*	10 000h (titanium plates, specific SC6 ruthenium coating)
Electric power	Max 200 W
Minimum flow rate (needed to purge air from the cell)	5 m³ / h
Maximum flow rate	18 m³/h (Bypass mandatory over this level)
Maximum authorised cell pressure	2,75 bar (KPa)
Maximum water temperature	40 °C
Minimum water temperature	5 °C
Length of the cell cable	1,8 m
Protection index	IP43
Cell dimensions (L x w x h)	32,0 x 13,5 x 11,0 cm
Dimensions of the power pack (L x w x h)	32,0 x 37,0 x 12,0 cm
Power supply	220-240 VAC / 50-60 Hz

* Under good operating conditions

INSTALLATION

- The control unit is installed in the plant room or beneath a shelter.
- The distance between the control unit and the cell is 1.5 m (the cell cable is 1.8 m long)
- The control unit should be permanently connected to an electrical source (by using internal timers)

SPARE PARTS Spare parts p.324

Hydroxinator® iQ installation diagrams

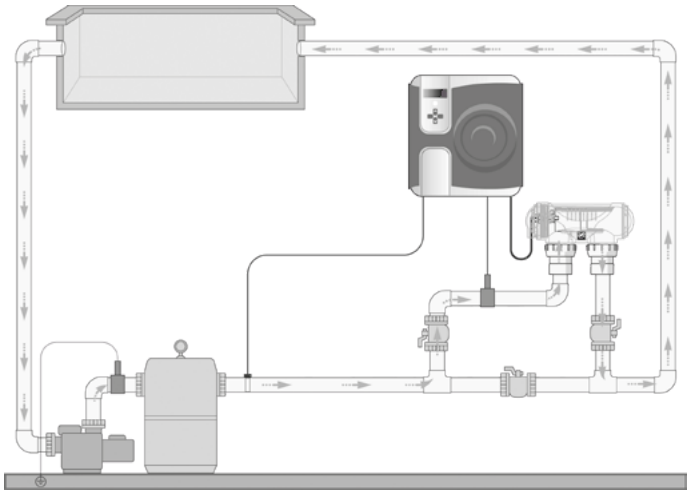

ASSOCIATED PRODUCTS

pH Link Module 2019	Dual Link Module 2019	MagnaPool® Minerals	Crystal Clear 0.7/1.3 mm	Crystal Clear 1,0/3,0 mm
WW000176	WW000177	WC000163	WF000063	WF000064

MagnaPool® Minerals

+ Exclusive: patented MagnaPool® minerals specifically for MagnaPool® pools
+ Crystal-clear water, less chloramines
+ Eco-friendly: salt-free formulation (no sodium chloride)
+ Easy: easy handling with 10 kg packaging

ALL TYPES OF SWIMMING POOLS | MagnaPool ECOSYSTEM | ECO-FRIENDLY

PRODUCT REFERENCE

Product Reference	WC000163

DESCRIPTION

Contents	Patented MagnaPool® minerals
Formulation	Magnesium chloride and potassium chloride
Form	Tablet/powder mixture
Dosage*	5 kg/m³
Bag dimensions (l x h)	40 x 50 cm
Bag net weight	10 kg
Palletization	72 bags per pallet (minimum order quantity = 10 bags)
Pallet net weight*	720 kg
Usage indication	1 x 720 kg pallet is enough to start up 1 or 2 MagnaPool® swimming pools (depending on volume)

* Add 5 x 10kg bags per 10 m³ to measure a concentration of 4 g/L (4000 ppm).

ASSOCIATED PRODUCTS

Hydroxinator® iQ	Hydroxinator®	Crystal Clear 0,7/1,3 mm	Crystal Clear 1,0/3,0 mm
WW000172/173/174/175		WF000063	WF000064

9 329173 013572

Crystal Clear

+ Optimum filtration efficiency
+ Long lasting : lasts 3 times longer than sand
+ Eco-friendly : up to 75% water savings

ALL TYPES OF SWIMMING POOLS | FINE FILTRATION | ECO-FRIENDLY | MagnaPool ECOSYSTEM

	Crystal Clear 0,7/1,3 mm	Crystal Clear 1,0/3,0 mm
PRODUCT REFERENCE		
Standard model	WF000063	WF000064

DESCRIPTION	
Contents	Filtering medium made of 100% pure glass crystals
Form	Translucent
Dosage	Total weight in the filter : 10% less than the equivalent in sand 1,0/3,0mm : sufficient to cover the filter laterals 0,7/1,3 mm : in addtion, to make up the total weight
Filtration efficiency	77,9% turbidity reduction*
Bag dimensions (l x h)	45 x 65 cm
Bag net weight	15 kg (= shipping unit, skus can be mixed on a pallet)

ASSOCIATED PRODUCTS

MS filter	Hydroxinator® iQ
WF000094/95/96/97/98	WW000172/173/174/175

* Turbidity reduction test carried in a lab using Crystal Clear fine under EN 16713-1 standard (test #7.2.4). Minimal regulatory requirement is 50%.

9 317545 025414
Crystal Clear 0,7/1,3 mm

9 317545 025421
Crystal Clear 1,0/3,0 mm

> NATURE² MINERAL PURIFIERS
Stand-alone and environmentally-friendly

Zodiac® mineral purifiers treat and clarify water using fewer chemical products.

> HOW DOES IT WORK?

Nature² technology combines **recognized disinfection and purification efficiency of certain mineral components** and the unique properties of a material used in high-tech industries: ceramic. It was chosen for its unequalled contact area with water, equivalent to 16 ha in our smallest cartridge (micro-porous surface area, laid flat).

The ceramic beads retain micro-particles (colloidal matter) not stopped by the filter, to clarify the swimming pool water.

Zinc particles, coated on some ceramic beads, give Nature² cartridges algicidal properties.

Silver particles, coated on other ceramic beads, offer bactericidal and fungicidal (disinfection) properties.

The combined action of these 3 properties enables Nature² systems to use **up to 4 times less chlorine** compared to conventional manual treatment: 0.5 ppm free chlorine is enough (depending on conditions
of use).

OPERATION OF THE NATURE² SPA CARTRIDGE

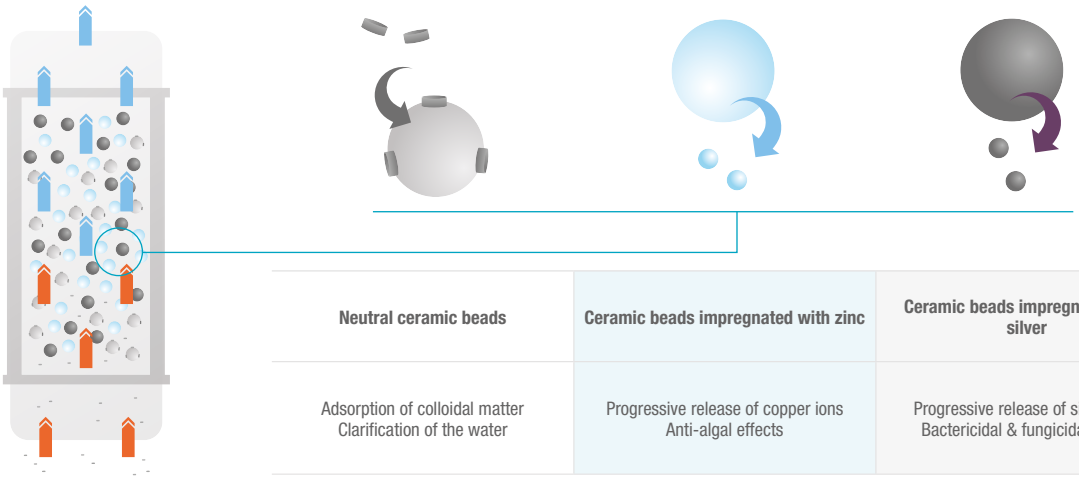

Neutral ceramic beads	Ceramic beads impregnated with zinc	Ceramic beads impregnated with silver
Adsorption of colloidal matter Clarification of the water	Progressive release of copper ions Anti-algal effects	Progressive release of silver ions Bactericidal & fungicidal effect

> FOR ECO-RESPONSIBLE BATHING

- Requiring up to 4 times less chlorine, Nature² systems clearly enhance bathing (less odour, no more unpleasant sensations on the skin, etc.).
- By using fewer chemical products, pH is potentially less disturbed. The water balance, a measure of efficient disinfection treatment, is consequently more stable.
- Depending on models and needs, Nature² can also be used with a salt chlorinator, active oxygen, a UV system or an ozonator.

Nature² Spa

+ Ready to use
+ Autonomous
+ Eco-friendly

ALL TYPES OF DE SPAS | EASY INSTALLATION | ECO-FRIENDLY

Nature² Spa Cartridge - 6-packs display

PRODUCT REFERENCE

Standard model	WN000001

ACCESSORIES INCLUDED IN THE PACK

Positioning pins

FOR WHICH POOL?

Maximum volume of treated water	0 - 4 m³

DESCRIPTION

Type of disinfectant to use	Stabilised organic chlorine, «dichlor» or «trichlor» type (tablets or granules), calcium hypochlorite inroganic chlorine, liquid chlorine, active oxygen (liquid or powder) or UV treatment may be used. Compatible with salt water chlorination.
Cartridge life-span	6 months from the time the cartridge is placed in the purifier
Compatibility	Nature² Spa is not compatible with bromide and its derivatives, chlorine free disinfectants of the PHMB types (or "biguanides"), products containing copper, stain remover products and metal blockers.

TECHNICAL SPECIFICATIONS

Water flow minimum / maximum	Adapted to all spa flow rates
Maximum operating temperature (water)	35 °C
Installation	Inside the spa cartridge filter
Cartridge weight	100 g
Minimum order quantity	1 x 6-pack display

INSTALLATION

- The Nature² cartridge slides straight into the spa's cartridge filter. Use the positioning pins if necessary, so that the cartridge is positioned in the middle of the filter.

Nature² Spa installation diagram:

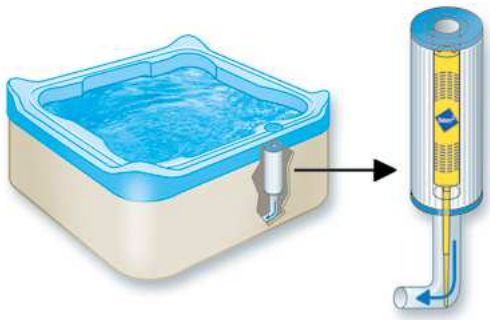

9 317545 020044

Nature² Spa Cartridge - 6-packs display

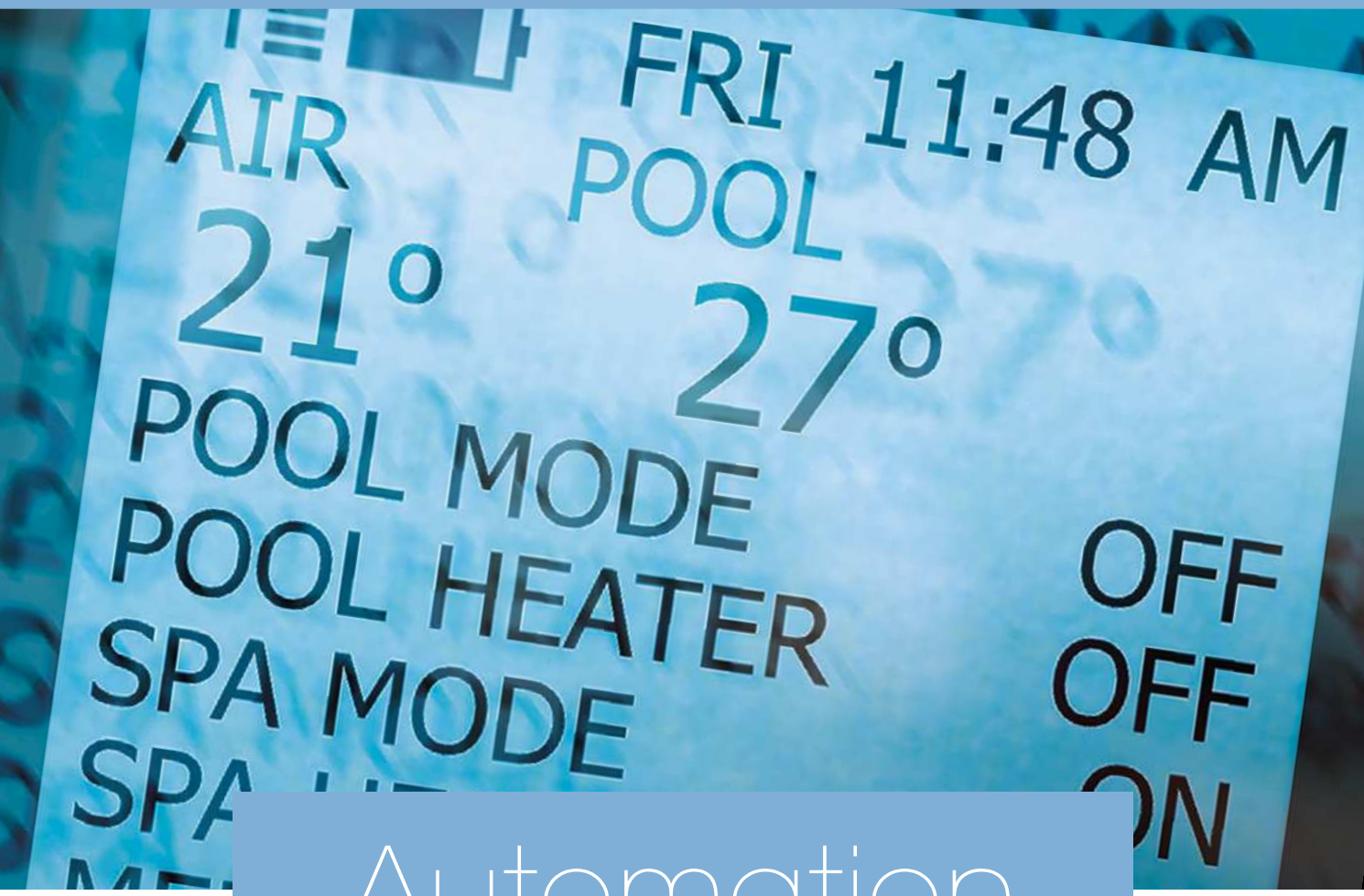

Automation

INTRODUCTION	**P.194**
• AquaLink® TRi	p.196

> EASY, INTELLIGENT POOL AUTOMATION

Automation, as applied to the swimming pool, is intelligent management and remote control of pool equipment using any Web-enabled device (smartphone, tablet or computer).

> TECHNOLOGY SERVING YOUR SWIMMING POOL

With extensive experience in automation developed over many years in other parts of the world, Zodiac® innovates with **AquaLink® TRi, an intuitive full connected pool system** allowing you to communicate with your swimming pool using the **dedicated iAquaLink™ app.**

iAquaLink™

- **iAquaLink™ identifies the remote communication technology** used by the smartphone app (or the Website).
- **AquaLink® TRi identifies the control unit** to which all the swimming pool equipment is connected.

iAquaLink COMPATIBLE

REFERENCE POINT
Find iAquaLink™ compatible products using this pictogram.

For more info about Zodiac® automation scan the QR code below:

or by visiting our YouTube channel:
http://youtu.be/utgvFia1yr4

> EASY TO USE

iAquaLink™ app lets you access the pool at any time, from anywhere, at no cost*. **All Web-enabled mobile devices and computers can be used to control the pool remotely** (smartphones, tablets, PC, MAC, etc.).

Available on the iPhone App Store

Google play

HTML 5

- The free iAquaLink™ application is available for Apple® and Android™ platforms, and on virtually all other internet-connected mobile devices using the Web HTML5 application (go to www.iaqualink.com for more information).
- The AquaLink® TRi control unit also has a remote user interface giving access to all settings when the user is at home.

* Free smartphone applications. Excludes any operator charge for online data usage.

Zodiac® swimming pool automation offers 3 user interfaces:

AquaLink® TRi

Smartphone / Tablet

PC / Mac

The Zodiac® swimming pool automation system is as suitable for a new swimming pool (installation during construction) as it is for modernising an existing swimming pool ('Retrofit').

> HOW DOES IT WORK?

Zodiac® automation offers **efficient and customised control of all swimming pool equipment** and beyond!
Everything is connected to the AquaLink® TRi control unit to centralise information and offer the following possibilities:

- filtration times control and programming
- management of a variable speed pump (specially developed to operate with FloPro™ VS)
- control water treatment (specially developed to operate with a TRi or TRi Expert chlorinator or a MagnaPool® Hydroxinator®)
- automatic management of pH regulation (optional pH regulation module)*
- automatic management of ORP disinfection level (optional ORP regulation module)*
- control pool heating (heat pump, heat exchanger, heater, etc) & manage temp setpoint
- control pool lighting (compatible with NL Leds for colour management)
- control cleaning (booster for hydraulic pressure cleaner)
- control water features and so much more.

AquaLink®TRi offers users **intelligent and eco-responsible management of their pool.**

* Requires an upgrade for TRi chlorinators manufactured before January 2013 Control board needs to be replaced.

STANDARD INSTALLATION

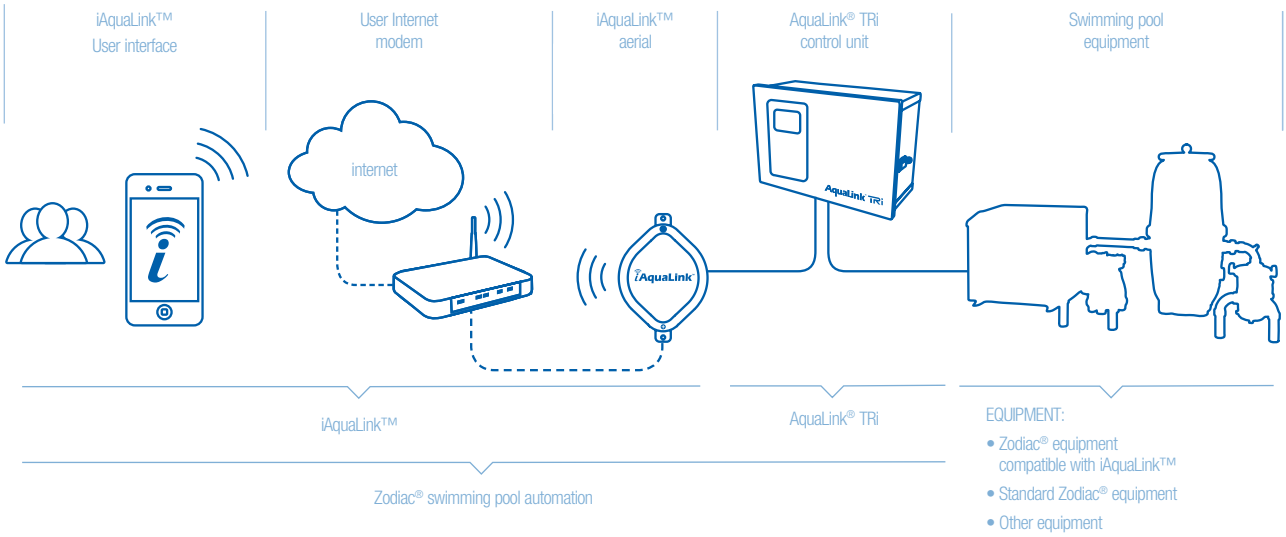

COMPATIBILITY

All standard swimming pool equipment can be connected to the Zodiac® swimming pool automation system.

What's more, certain Zodiac® products, such as TRi platform chlorinators or the FloPro™ VS variable speed pump are specifically developped to work seamlessly with AquaLink® TRi. User benefits from two-way exchanges with his pool equipment, making the most of advanced functionalities.

Products compatible with remote management through iAquaLink™ app:

Led NL lamps

TRi Expert, TRi Expert LS & Hydroxinator® (old version)

FloPro™ VS & FloPro™ VA AUT

AquaLink® TRi

2 YEAR WARRANTY

+ Easy to use: Multilingual and intuitive user interface, can be used remotely
+ Versatile: Compatible with all standard swimming pool equipment
+ Intelligent: iAquaLink™ advanced connectivity and dedicated smartphone application
+ Synergy: Enhances operation of swimming pool equipment

ALL TYPES OF SWIMMING POOLS · iAquaLink CONTROL · ENERGY SAVING · MagnaPool ECOSYSTEM

PRODUCT REFERENCE

WA000016

ACCESSORIES INCLUDED IN THE PACK

iAquaLink™ antenna kit	Remote user interface kit	Temperature sensor kit	Installation kit

DESCRIPTION

User interface	10-line, backlit LCD screen, remote interface (remote kit supplied)
Languages	8 (FR-EN-ES-DE-IT-NL-PT-AF)
Operating mode(s)	normal (programmed pool mode), Manual, Service mode
Clock / Timer	24 h clock, up to 10 timers per controlled equipment
Safety features	Operating safety features with messages based on selected scenario
Connection to domestic internet network (via iAquaLink™ aerial)	Wired (using a RJ45 ethernet cable - not provided)
Possible user interfaces	AquaLink® TRi LCD screen (usable remotely)
Compatible mobile platforms	Apple® (free application) Android™ (free application) Any other mobile platform (HTML5 web application)
Dedicated Web Site	www.iaqualink.com

TECHNICAL SPECIFICATIONS

Integrated outputs	RS485 connector for all 'iAquaLink™ ready' devices (Use of the multiplexed interface card is optional if more than 2 devices are connected to it) Specific contact to control the heating system (heat pump, heat exchanger, electric heater)
Configurable outputs	4 relays, 0-250 V / 0-25 A, to control all high or low voltage equipment: filtration pump, booster pump, counter-swim pump, standard chlorinator, lighting transformer, garden lighting, etc.
Inputs	Temperature sensor for ambient air Temperature sensor for water in the pool Temperature sensor for solar heating (option)
Control unit dimensions (W x H x D)	37 x 30 x 14 cm
Protection rating	IP55
50 Hz power supply	220-240 VAC

9 317545 019239

INSTALLATION

A = 4 relays to control any high or low voltage appliance (0-25 A). Can be used as a dry contact if only one connector pair is used (L1/Lo1 or L2/Lo2). The first relay (named « filter pump ») is only dedicated to filter pump supply (single speed, dual speed or variable speed pump).
B = 24 Vdc supply command of the 4 relays (filter pump, auxiliaries 1, 2 and 3)
C = Green terminal bar with the following connections :

- 1-2 : Dry contact for heater system management
- 3-4 : Solar heater temperature sensor connection (optional)
- 5-6 : Water temperature sensor connection
- 7-8 : Ambiant air temperature sensor connection

D = Connectors for external equipment :

- RS485 / iAquaLink™ 4-way connector :
  - iAquaLink™ antenna (provided with AquaLink® TRi unit)
  - « iAquaLink™ ready » appliances (Hydroxinator®, TRi Expert, TRi, FloPro™ VS AUT…).
  Remark : A multiplex board must be used if more than 2 appliances are connected to RS485 / iAquaLink™4-way connector (optional, part R0570200).
- RJ11 socket : Removable user interface.
  A remote kit is provided with a 5 m RJ11 cable.

E = Temperature sensors (from left to right) :

- Solar heater temperature sensor (optional)
- Water temperature sensor
- Ambiant air temperature sensor

Diagram of standard connections on AquaLink® TRi

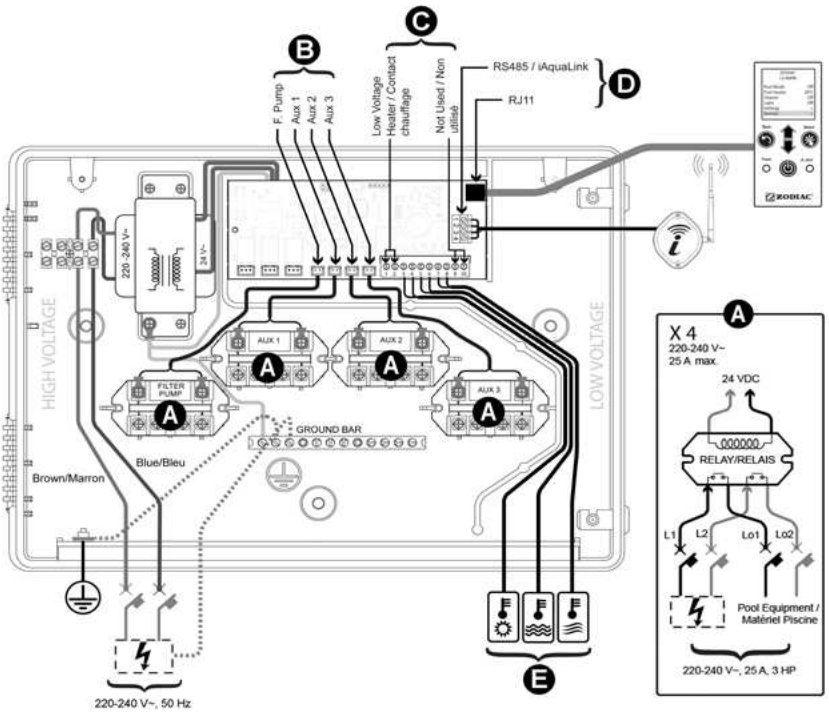

SPARE PARTS **Spare parts p.336**

FUNCTIONALITIES AND COMPATIBILITIES

	Air temperature	Water temperature	Filtration pump	Zodiac variable speed pump	Heating (all types)	Standard chlorinator	Zodiac chlorinators (TRi Expert, Hydroxinator)	Boost & Low modes	pH & Redox values	Auxiliaries 1, 2 & 3	Colour lights (NL Leds)
Information	✔								✔		
Information + control		✔	✔		✔	✔				✔	✔
Information + bilateral control				✔			✔	✔			

* depends on compatibility

ACCESSOIRES DISPONIBLES EN OPTION

	Multiplex board	TRi Expert *	TRi Expert LS*	Hydroxinator®*	FloProTM VS AUT	Projecteurs Led NL
reference	R0570200	* Available while stock lasts			WP000079	WT000233, 234, 235, 236, 237 & 238

RT 2100 / RT 3200

Spare Parts

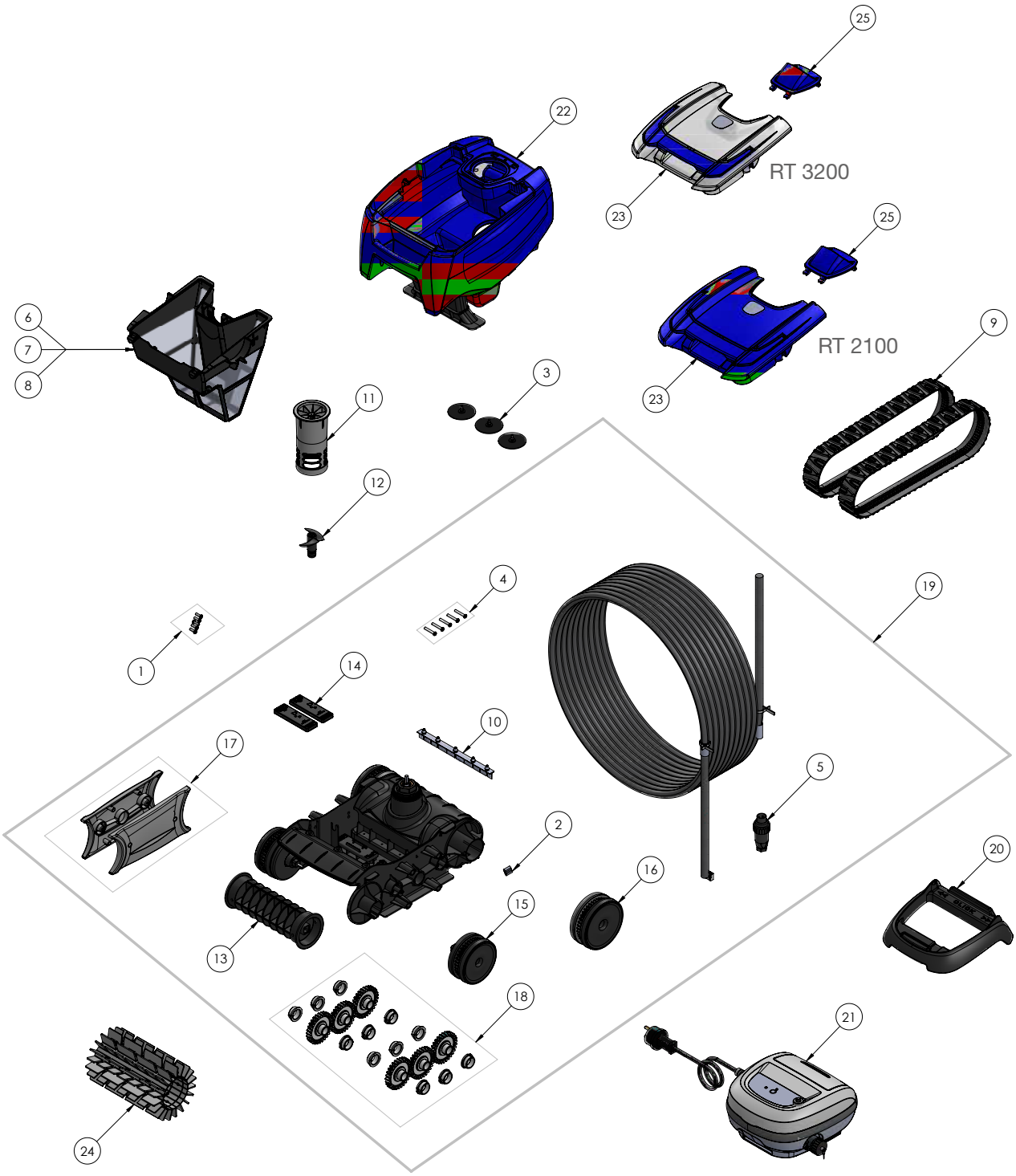

Position	Description	RT 2100	RT 3200
1	Screws 4*12 mm (x5)	R0516700	
2	Motor block Shaft pin Ø4 (Set of 5)	R0657900	
3	Exhaust Valve C (Set of 3)	R0633300	
4	Screw 4*25 mm (Set of 5)	R0638900	
5	Floating cable plug	R0565600	
6	Fine filter	R0762900	
7	Large filter	R0763000	
8	Ultra Fine filter	R0763100	
9	Tracks (Set of 2)	R0765600	
10	Blades (Set of 5)	R0765800	
11	Internal flow outlet	R0766100	
12	Impeller	R0766200	
13	Brush holder	R0767000	
14	Ballast (Set of 2)	R0767100	
15	Complete Front wheels (Set of 2)	R0771800	
16	Complete Back wheels (Set of 2)	R0771900	
17	Flanges	R0772000	
18	Complete gears kit	R0772100	
19	Complete chassis	R0767400	
20	Control unit base	R0662600	
21	Control Unit floor	R0762200	
	Control Unit floor & wall		R0762300
22	Complete body Type 1	R0766300	
23	Complete cover Type 11	R0764500	
	Complete cover Type 9		R0764300
24	Brush R9022	R0764900	
	Brush R9022	R0764900	
25	External Flow OutletPMS295	R0772200	
	External Flow OutletPMS295	R0772200	

RC 4400 - RC 4401 - RC 4402

Spare Parts

Position	Description	Reference
1	Complete Motor Block C	R0632000
2	BowlC	R0633400
3	Impeller C	R0633200
4	Flow OutletC	R0633500
5	Exhaust Valve C (Set of 3)	R0633300
6	Motor block Shaft pin Ø4 (Set of 5)	R0657900
7	Handle Shaft C	R0633600
8	Complete free gear box C RAL9022	R0632200
9	Complete gear box C RAL9022	R0632300
10	Track C Z (Set of 2)	R0633900
11	Bottom plate	R0633800
12	body A Blue C	R0633700
13	Brush scrubber C RAL9022 Z (Set of 2)	R0633100
14	Complete filter 100 C Z	R0632600
15	Complete filter 200 C Z	R0632601
16	Complete filter 60 C Z	R0632602
17	Complete cover C A-0	R0632400
18	Complete Handle C Blue Z	R0631900
19	Complete Floating cable C 18 m	R0632101
20	Connector 3PTS body	R0634100
21	Floating cable CZ	R0634200
22	Caddy Handle	R0565000
23	Caddy wheels (*2)	R0565100
24	Trolley tube C	R0634400
25	Complete lower partTrolley C	R0632800
26	Trolley C Accessories	R0632900
27	Screws 4*12 mm (x5)	R0516700
28	Screw 4*16mm (Set of 5)	R0608500
29	Control box Type 1 C	R0633000
30	Polyester Brushes (*2)	R0697600
31	Complete Brush roller C + 2 keys	R0722400
32	Transport Trolley Vortex	R0639500
-	Kit for splippery surfaces *2	R0718600

RV 4400

Spare Parts

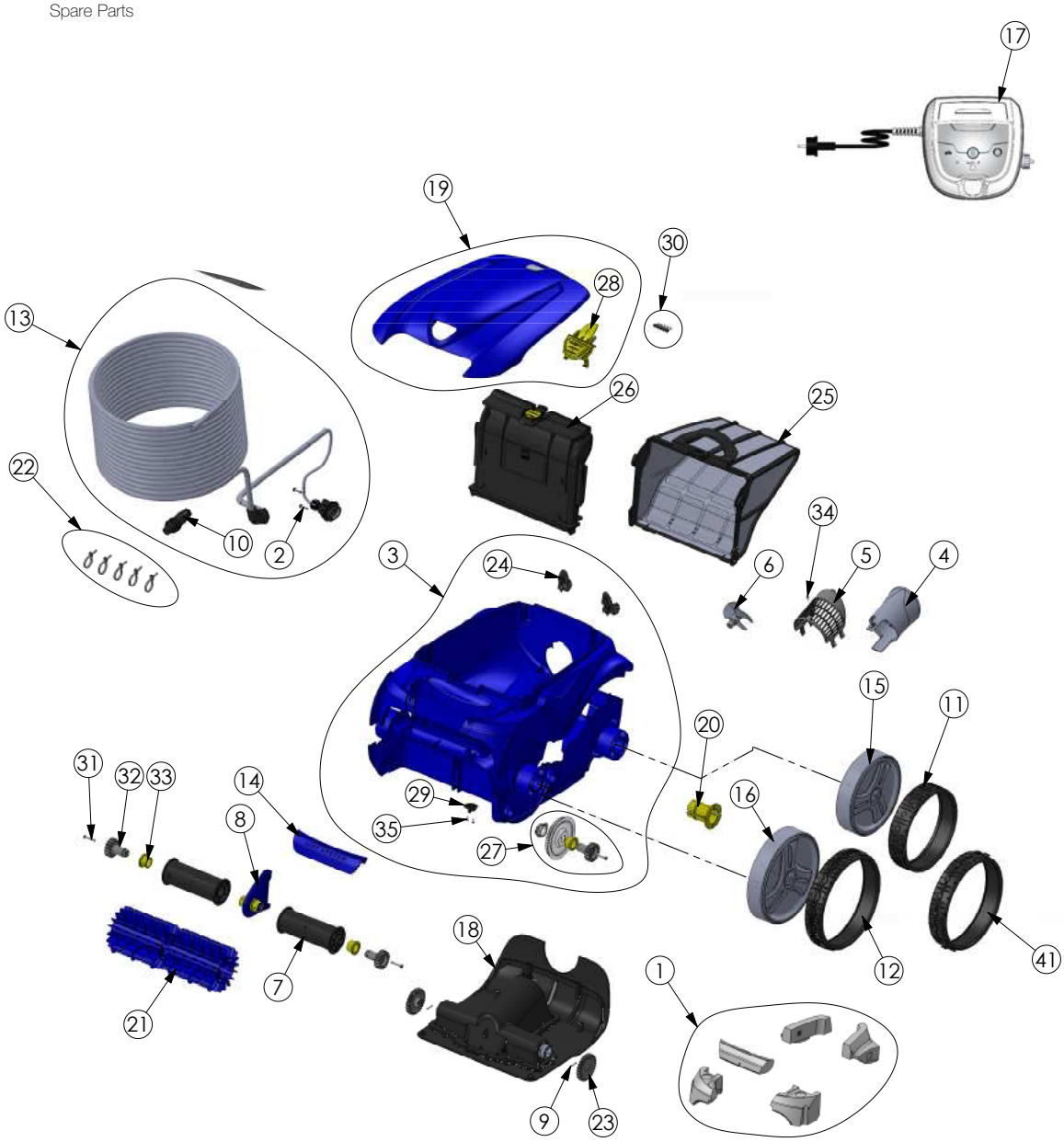

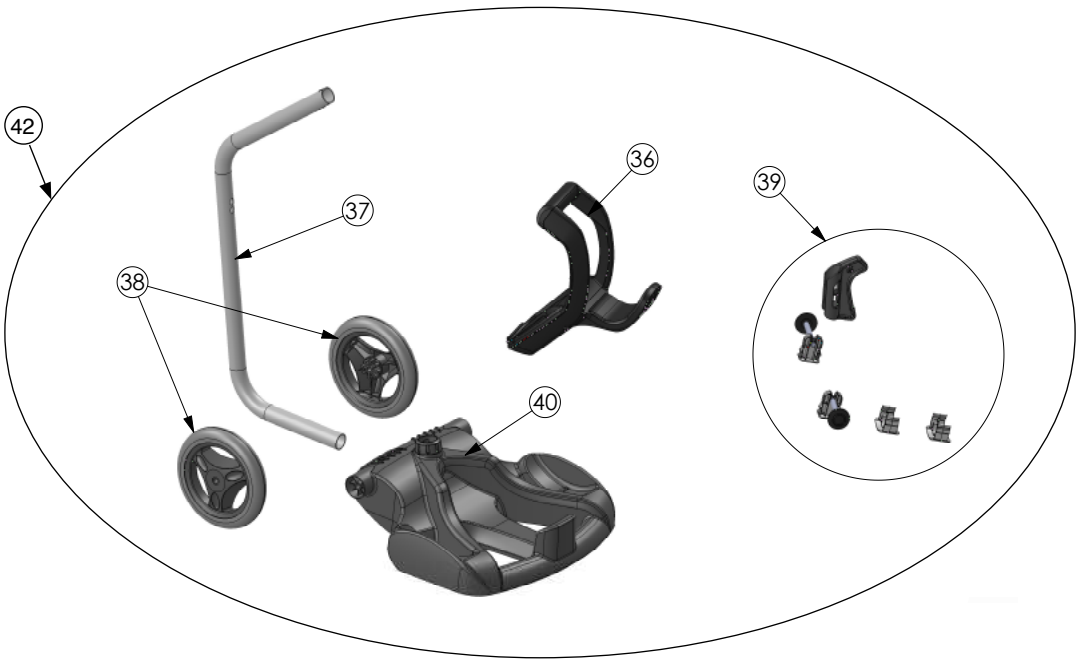

Position	Description	Reference
1	Main housing 2WD ii	R0589100
2	Float	R0539700
3	Flow Outlet	R0517500
4	Motor block Type a	R0637800
5	Propeller	R0517000
6	Motor screen	R0517600
7	Brush roller	R0517400
8	Roller support	R0518700
9	Screw 4*25 mm (Set of 5)	R0638900
10	17 Gear (*2)	R0639000
11	Outer bearing (*2)	R0639100
12	Rampe	R0519000
13	Transmission	R0517200
14	Zodiac Brush (Set of 2)	R0635900
15	Wheel bushing zodiac	R0636700
16	Rim rear R9022 zodiac	R0636100
17	Rim Large R9022 zodiac	R0636001
18	Tire rear black zodiac	R0636300
19	Tire Large black zodiac	R0636201
20	filter canister support	R0517700
21	Fine filter v	R0636600
22	Hood blue	R0544700
23	cover latch grip PMS108	R0638700
24	Roller (Set of 2)	R0518100
25	Caddy tube	R0565200
26	Caddy Handle	R0565000
27	Caddy wheels (*2)	R0565100
28	Handle PMS295 LS	R0636500
29	Caddy Accessories	R0564900
30	Caddy base	R0564800
31	Floating cable 18m	R0516800
32	Floating cable clamp (Set of 5)	R0567900
33	Floating cable plug	R0565600
34	Motor block Shaft pin (Set of 5)	R0567800
35	Screw 4*16mm (Set of 5)	R0608500
36	Drive gear (Set of 2)	R0518800
37	Screws 4*12 mm (x5)	R0516700
38	Screw 2.9*9.5 mm (Set of 5)	R0639200
39	Screws 2,2*6,5 mm (x5)	R0564500
40	Control Unit Type 1v	R0636900
41	Tire Large tile zodiac	R0636400
42	Complete Trolley	R0609100

RV 5300

Spare Parts

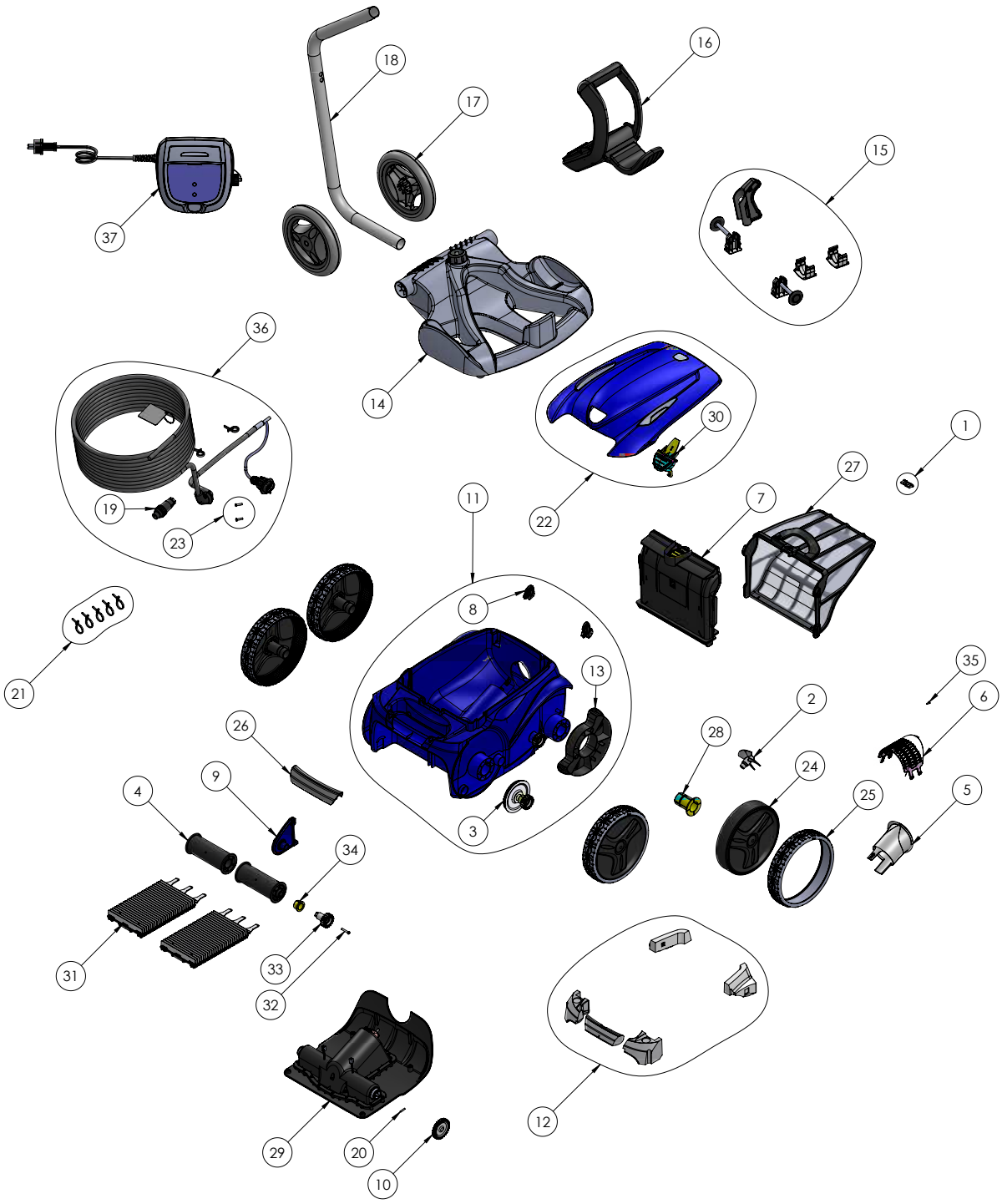

Position	Description	Reference
1	Screws 4*12 mm (x5)	R0516700
2	Propeller	R0517000
3	Transmission	R0517200
4	Brush roller	R0517400
5	Flow Outlet	R0517500
6	Motor screen	R0517600
7	filter canister support	R0517700
8	Roller (Set of 2)	R0518100
9	Roller support	R0518700
10	Drive gear (Set of 2)	R0518800
11	Main housing 4WD blue	R0539200
12	Float	R0539700
13	Cover wheels protection	R0540300
14	Caddy base	R0564800
15	Caddy Accessories	R0564900
16	Caddy Handle	R0565000
17	Caddy wheels (*2)	R0565100
18	Caddy tube	R0565200
19	Floating cable plug	R0565600
20	Motor block Shaft pin (Set of 5)	R0567800
21	Floating cable clamp (Set of 5)	R0567900
22	Hood blue deco	R0595900
23	Screw 4*16mm (Set of 5)	R0608500
24	Rim Large black zodiac	R0636000
25	Tire Large ral9022 zodiac	R0636200
26	Handle RAL9022 zodiac	R0540403
27	Fine filter v	R0636600
28	Wheel bushing zodiac	R0636700
29	Motor block Type c	R0638000
30	cover latch grip PMS108	R0638700
31	Brush (Set of 2)	R0638800
32	Screw 4*25 mm (Set of 5)	R0638900
33	17 Gear (*2)	R0639000
34	Outer bearing (*2)	R0639100
35	Screw 2.9*9.5 mm (Set of 5)	R0639200
36	Floating cable 18m	R0516800
37	Control Unit Type 12v	R0805400
38	Complete Trolley	R0609100

RV 5400 SW / RV 5500 SW / RV 5600

Spare Parts

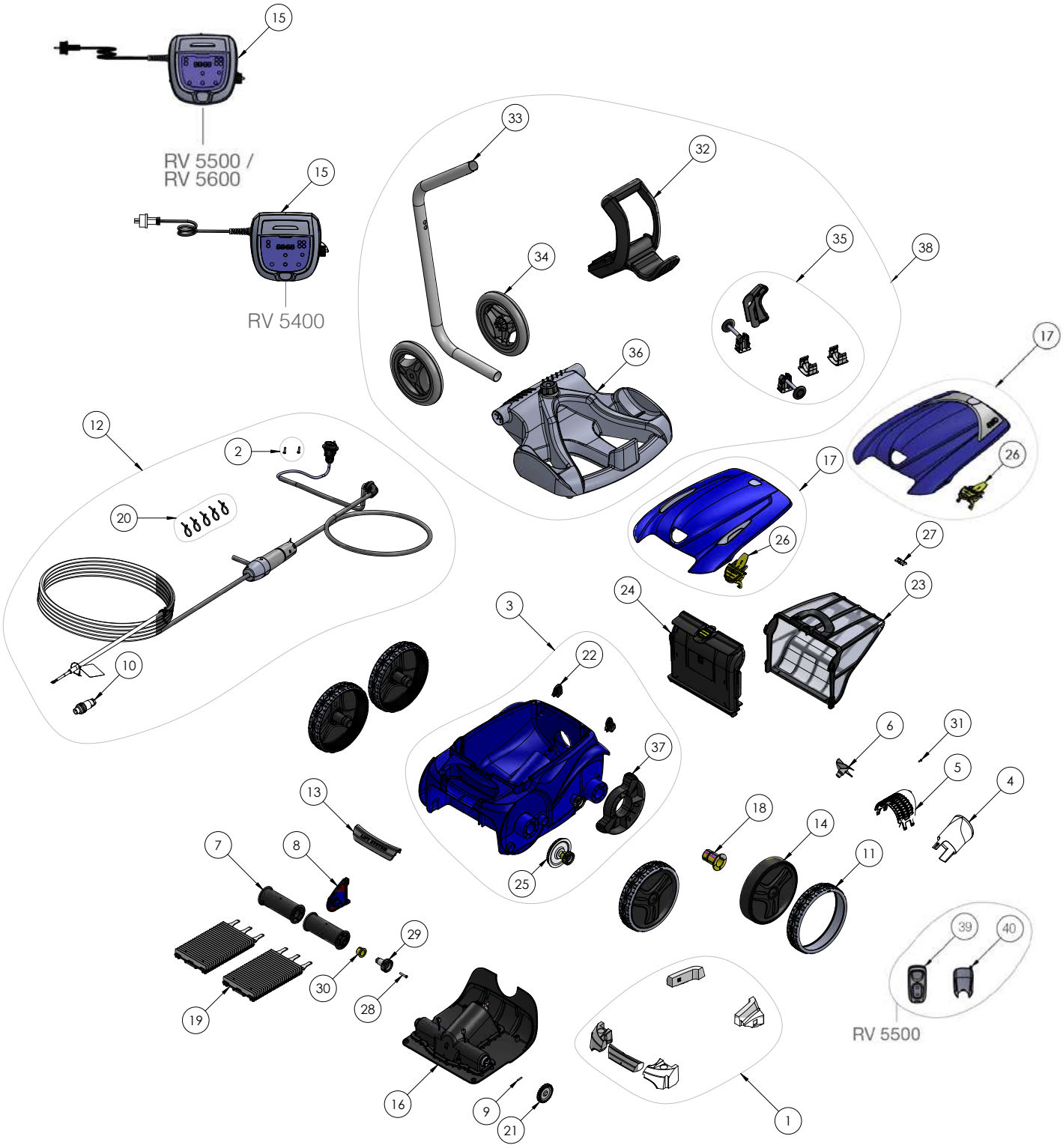

Position	Description	RV 5400	RV 5500	RV 5600
1	Float	R0539700		
2	Screw 4*16mm (Set of 5)	R0608500		
3	Main housing 4WD blue	R0539200		
4	Flow Outlet	R0517500		
5	Motor screen	R0517600		
6	Propeller	R0517000		
7	Brush roller	R0517400		
8	Roller support	R0518700		
9	Motor block Shaft pin (Set of 5)	R0567800		
10	Floating cable plug	R0565600		
11	Tire Large ral9022 zodiac	R0636200		
12	Floating cable 18m swivel	R0726600		
	Floating cable 21m swivel		R0726700	
	Floating cable 25m			R0713200
13	Handle RAL9022 LS	R0636501		
14	Rim Large black zodiac	R0636000		
15	Control Unit Type 3v	R0637100		
	Control Unit Type 4v		R0637200	
	Control Unit Type 10v			R0713400
16	Motor block Type c	R0638000		
	Motor block Type d		R0638100	
	Motor block Type d			R0638100
17	Hood blue deco	R0595900		
	Hood blue spoiler		R0596000	
18	Wheel bushing zodiac	R0636700		
19	Brush (Set of 2)	R0638800		
20	Floating cable clamp (Set of 5)	R0567900		
21	Drive gear (Set of 2)	R0518800		
22	Roller (Set of 2)	R0518100		
23	Fine filter v	R0636600		
24	filter canister support	R0517700		
25	Transmission	R0517200		
26	cover latch grip PMS108	R0638700		
27	Screws 4*12 mm (x5)	R0516700		
28	Screw 4*25 mm (Set of 5)	R0638900		
29	17 Gear (*2)	R0639000		
30	Outer bearing (*2)	R0639100		
31	Screw 2.9*9.5 mm (Set of 5)	R0639200		
32	Caddy Handle	R0565000		
33	Caddy tube	R0565200		
34	Caddy wheels (*2)	R0565100		
35	Caddy Accessories	R0564900		
36	Caddy base	R0564800		
37	Cover wheels protection	R0540300		
38	Complete Trolley	R0609100		
39	Remote Control holster	-	R0548500	
40	Remote Control zodiac	-	R0548400	

RV 5480 iQ

Spare Parts

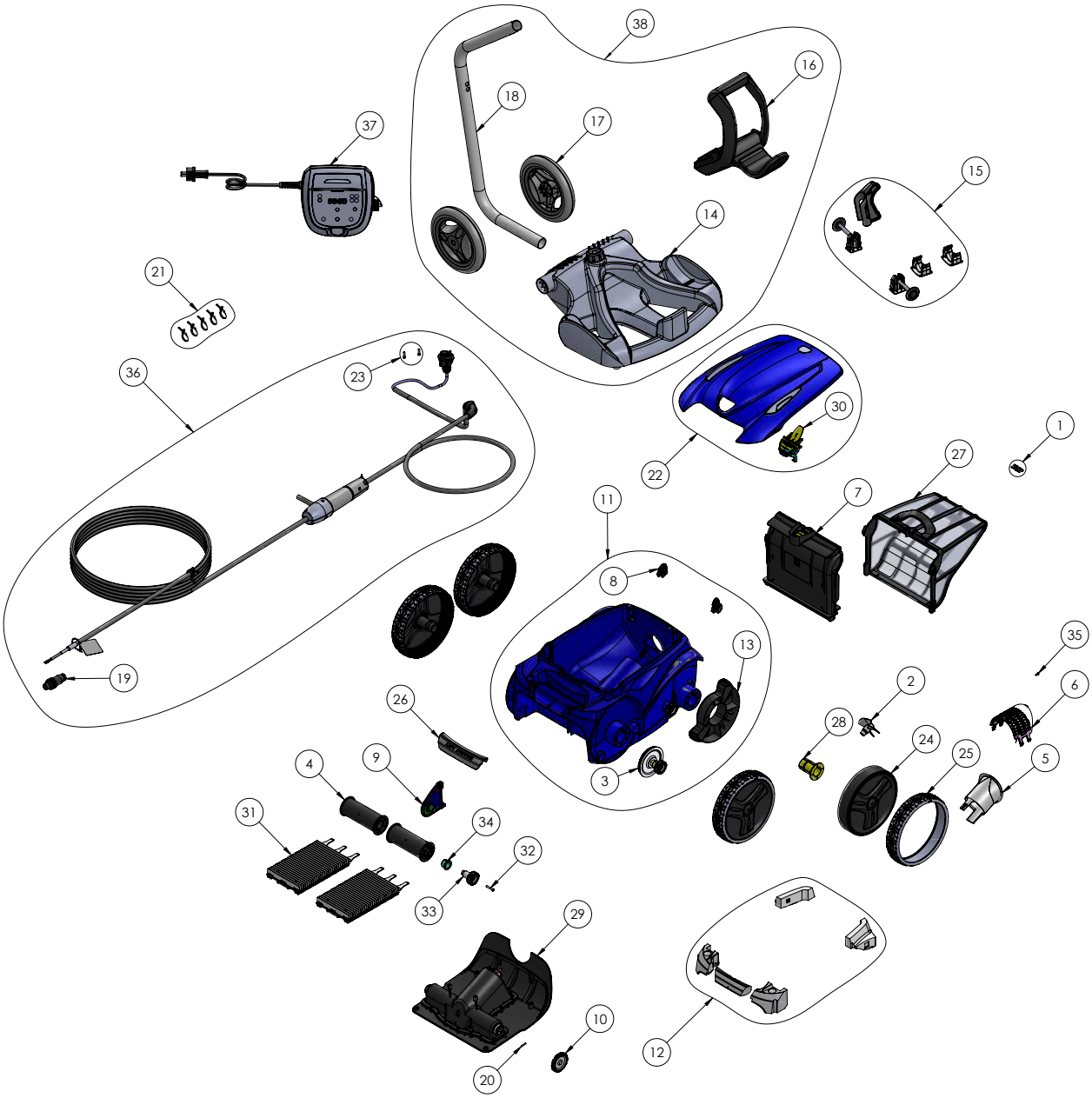

Position	Description	Reference
1	Screws 4*12 mm (x5)	R0516700
2	Propeller	R0517000
3	Transmission	R0517200
4	Brush roller	R0517400
5	Flow Outlet	R0517500
6	Motor screen	R0517600
7	filter canister support	R0517700
8	Roller (Set of 2)	R0518100
9	Roller support	R0518700
10	Drive gear (Set of 2)	R0518800
11	Main housing 4WD blue	R0539200
12	Float	R0539700
13	Cover wheels protection	R0540300
14	Caddy base	R0564800
15	Caddy Accessories	R0564900
16	Caddy Handle	R0565000
17	Caddy wheels (*2)	R0565100
18	Caddy tube	R0565200
19	Floating cable plug	R0565600
20	Motor block Shaft pin (Set of 5)	R0567800
21	Floating cable clamp (Set of 5)	R0567900
22	Hood blue deco	R0595900
23	Screw 4*16mm (Set of 5)	R0608500
24	Rim Large black zodiac	R0636000
25	Tire Large ral9022 zodiac	R0636200
26	Handle RAL9022 LS	R0636501
27	Fine filter v	R0636600
28	Wheel bushing zodiac	R0636700
29	Motor block Type d	R0638100
30	cover latch grip PMS108	R0638700
31	Brush (Set of 2)	R0638800
32	Screw 4*25 mm (Set of 5)	R0638900
33	17 Gear (*2)	R0639000
34	Outer bearing (*2)	R0639100
35	Screw 2.9*9.5 mm (Set of 5)	R0639200
36	Floating cable 18m swivel	R0726600
37	Control unit iQ Type 1EU	R0762100
38	Complete Trolley	R0609100

RA 6300 IQ

Spare Parts

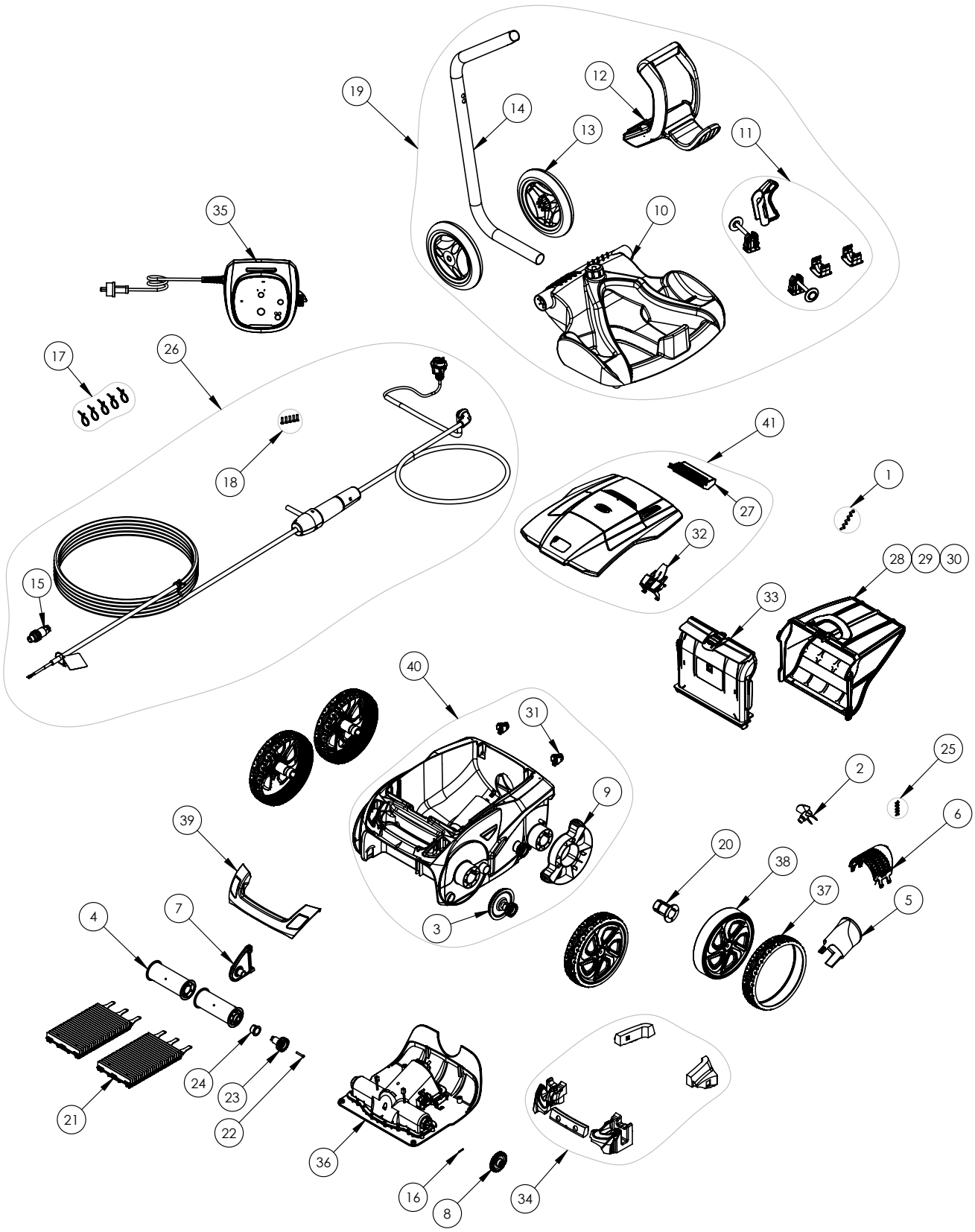

Position	Description	Reference
1	Screws 4*12 mm (x5)	R0516700
2	Propeller	R0517000
3	Transmission	R0517200
4	Brush roller	R0517400
5	Flow Outlet	R0517500
6	Motor screen	R0517600
7	Roller support	R0518700
8	Drive gear (Set of 2)	R0518800
9	Cover wheels protection	R0540300
10	Caddy base	R0564800
11	Caddy Accessories	R0564900
12	Caddy Handle	R0565000
13	Caddy wheels (*2)	R0565100
14	Caddy tube	R0565200
15	Floating cable plug	R0565600
16	Motor block Shaft pin (Set of 5)	R0567800
17	Floating cable clamp (Set of 5)	R0567900
18	Screw 4*16mm (Set of 5)	R0608500
19	Complete Trolley	R0609100
20	Wheel bushing	R0636700
21	Brush Type 2 R9022 (Set of 2)	R0638800
22	Screw 4*25 mm (Set of 5)	R0638900
23	17 Gear (*2)	R0639000
24	Outer bearing (*2)	R0639100
25	Screw 2.9*9.5 mm (Set of 5)	R0639200
26	Floating cable swivel 18m	R0726600
27	Back cover assembly	R0863200
28	Ultra Fine Filter 60µ	R0863500
29	Fine Filter 100µ	R0863600
30	Large Filter 200µ	R0863700
31	Roller, 2PK	R0864900
32	Cover Latch	R0865000
33	Filter Canister Support	R0865100
34	Float	R0865200
35	Control Box Type 3	R0867800
36	Motor Block Type 1	R0867700
37	Tire black R7021	R0865500
38	Rim Black	R0867500
39	Handle Navy Blue	R0867600
40	Main Housing Navy Blue	R0865800
41	Complete cover Navy Blue	R0867200

RA 6500 IQ

Spare Parts

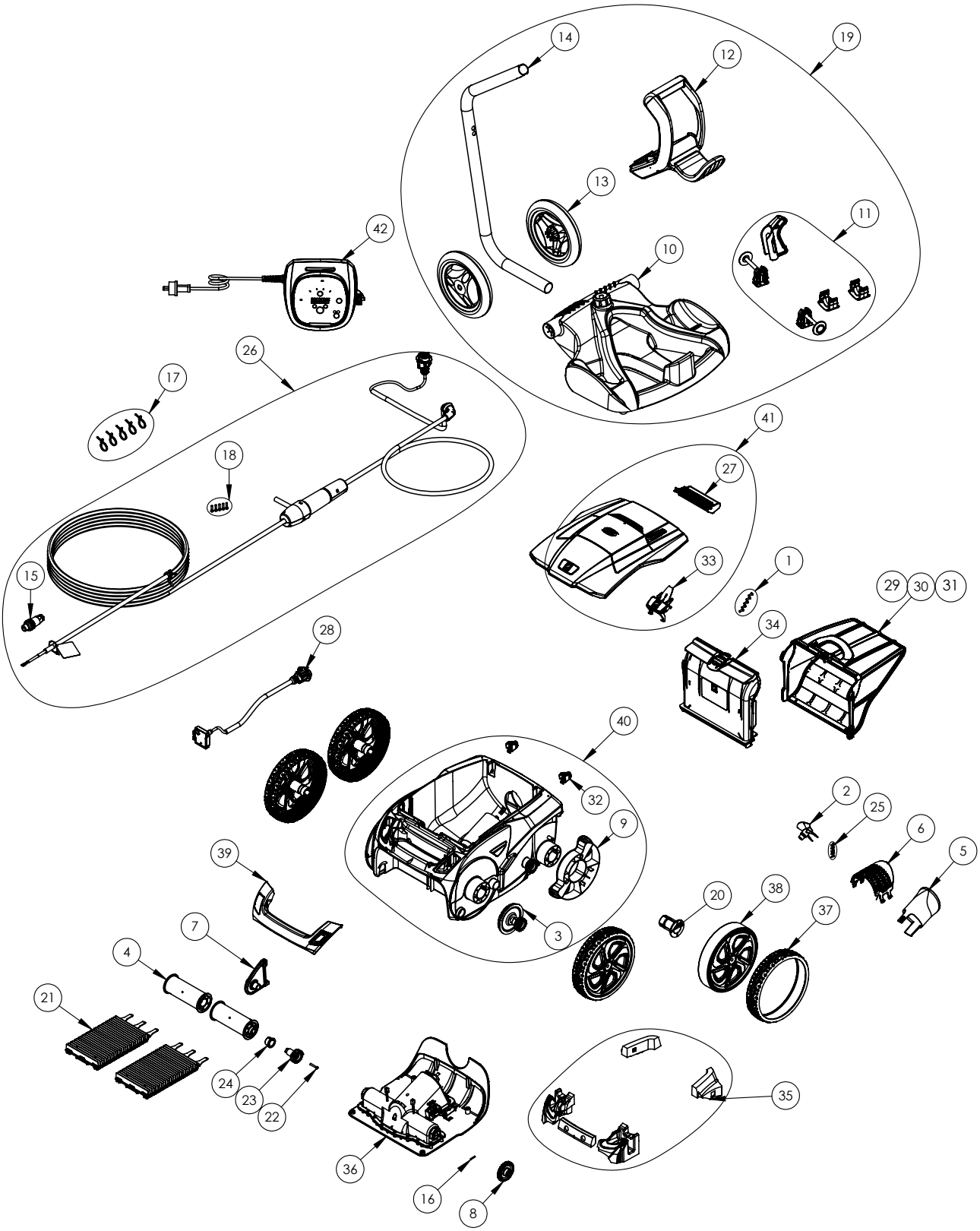

Position	Description	Reference
1	Screws 4*12 mm (x5)	R0516700
2	Propeller	R0517000
3	Transmission	R0517200
4	Brush roller	R0517400
5	Flow Outlet	R0517500
6	Motor screen	R0517600
7	Roller support	R0518700
8	Drive gear (Set of 2)	R0518800
9	Cover wheels protection	R0540300
10	Caddy base	R0564800
11	Caddy Accessories	R0564900
12	Caddy Handle	R0565000
13	Caddy wheels (*2)	R0565100
14	Caddy tube	R0565200
15	Floating cable plug	R0565600
16	Motor block Shaft pin (Set of 5)	R0567800
17	Floating cable clamp (Set of 5)	R0567900
18	Screw 4*16mm (Set of 5)	R0608500
19	Complete Trolley	R0609100
20	Wheel bushing	R0636700
21	Brush Type 2 R9022 (Set of 2)	R0638800
22	Screw 4*25 mm (Set of 5)	R0638900
23	17 Gear (*2)	R0639000
24	Outer bearing (*2)	R0639100
25	Screw 2.9*9.5 mm (Set of 5)	R0639200
26	Floating cable swivel 18m	R0726600
27	Back cover assembly	R0863200
28	Sensor Block assembly	R0863300
29	Ultra Fine Filter 60µ	R0863500
30	Fine Filter 100µ	R0863600
31	Large Filter 200µ	R0863700
32	Roller, 2PK	R0864900
33	Cover Latch	R0865000
34	Filter Canister Support	R0865100
35	Float	R0865200
36	Motor Block Type 2	R0865400
37	Tire black R7021	R0865500
38	Rim black R7021 and Silver	R0865600
39	Handle Navy Blue/Silver with window	R0865700
40	Main Housing Navy Blue	R0865800
41	Complete cover Navy Blue	R0867200
42	Control Box Type 5	R0867300

RA 6700 IQ

Spare Parts

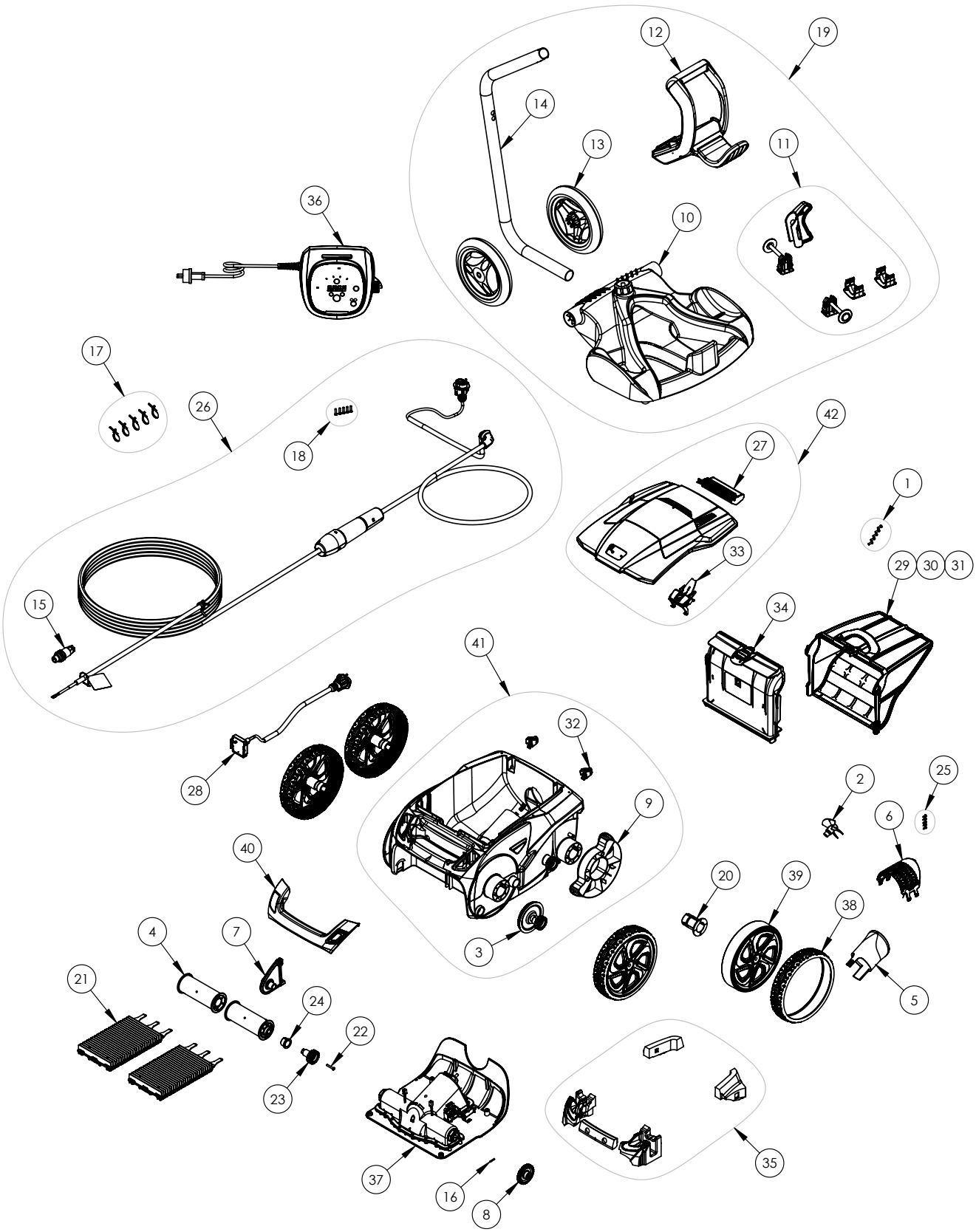

Position	Description	Reference
1	Screws 4*12 mm (x5)	R0516700
2	Propeller	R0517000
3	Transmission	R0517200
4	Brush roller	R0517400
5	Flow Outlet	R0517500
6	Motor screen	R0517600
7	Roller support	R0518700
8	Drive gear (Set of 2)	R0518800
9	Cover wheels protection	R0540300
10	Caddy base	R0564800
11	Caddy Accessories	R0564900
12	Caddy Handle	R0565000
13	Caddy wheels (*2)	R0565100
14	Caddy tube	R0565200
15	Floating cable plug	R0565600
16	Motor block Shaft pin (Set of 5)	R0567800
17	Floating cable clamp (Set of 5)	R0567900
18	Screw 4*16mm (Set of 5)	R0608500
19	Complete Trolley	R0609100
20	Wheel bushing zodiac	R0636700
21	Brush (Set of 2)	R0638800
22	Screw 4*25 mm (Set of 5)	R0638900
23	17 Gear (*2)	R0639000
24	Outer bearing (*2)	R0639100
25	Screw 2.9*9.5 mm (Set of 5)	R0639200
26	Floating Cable swivel 21M	R0713200
27	Back cover assembly	R0863200
28	Sensor Block assembly	R0863300
29	Ultra Fine Filter 60µ	R0863500
30	Fine Filter 100µ	R0863600
31	Large Filter 200µ	R0863700
32	Roller, 2PK	R0864900
33	Cover Latch	R0865000
34	Filter Canister Support	R0865100
35	Float	R0865200
36	Control Box Type 1	R0865300
37	Motor Block Type 2	R0865400
38	Tire black R7021	R0865500
39	Rim black R7021 and Silver	R0865600
40	Handle with sensor Navy Blue/Silver	R0865700
41	Main Housing Navy Blue	R0865800
42	Complete cover	R0865900

Vortex™ 1

Spare Parts

Position	Description	Reference
1	Complete smart motor block	W2120A
2	Complete smart rear wheel	W2103A
3	Smart rear wheel axle	W2106A
4	Complete smart front wheel	W2102A
5	Complete vortex™ 1 cover	W2111A
6	Complete smart Brush	W2107A
7	Smart right rotation kit	W2119A
8	Smart flow guide kit	W2112A
9	Smart propeller kit	W2113A
10	Smart rear Handle kit	W2117A
11	Smart left rotation kit	W2118A
12	Smart lest kit -16	W2204A
13	Smart outlet valve kit	W2115A
14	Smart filter	W2109B
15	Smart Floating cable kit	W2104A
16	Smart front wheel bandage kit	W2105A
17	Smart Floating cable kit-150	W2205A
18	Complete smart cable floater	W2108A
19	Smart valve cover kit	W2100A
20	Control box mounting	W2101A
21	cover float side	W2162A
22	cover float top	W2161A
23	Smart waterproof o-ring seal	W2320A
24	Vortex ™ 1 pack 2 filters 100 microns	W2199A
	Vortex™ 1 pack 2 filters 200 microns	W2198A
-	Vortex™ 1 transport bag	W2200A

Vortex™ 2/ 3 /4

Spare Parts

Position	Description	Vortex 2	Vortex 3	Vortex 4
1	Screw 2.9*9.5 mm (Set of 5)	R0639200		
2	Screw 4*16mm (Set of 5)	R0608500		
3	Motor block Shaft pin (Set of 5)	R0567800		
4	Motor screen	R0517600		
5	Screw 4*25 mm (Set of 5)	R0638900		
6	Flow Outlet	R0517500		
7	Zodiac Brush (Set of 2)	R0635900		
	Brush (Set of 2)			R0638800
8	Propeller	R0517000		
9	Motor screen	R0517600		
10	filter canister support	R0517700		
11	Fine filter v	R0636600		
	Ultra Fine filter v	R0638600		
	Large filter v	R0643700		
12	Float front	R0539700		
13	Float rear	R0539700		
14	Tire Large black zodiac	R0636201		
	Tire Large Tile pools	R0636400		
	Rim Large R9022 zodiac	R0636001		
15	Tire rear black zodiac	R0636300		
	Rim rear R9022 zodiac	R0636100		
16	17 Gear (*2)	R0639000		
17	Drive gear (Set of 2)	R0518800		
18	Wheel bushing zodiac	R0636700		
19	Outer bearing (*2)	R0639100		
20	Floating cable 15m	R0516800		
	Floating cable 18m	R0516800		
	Floating cable 21m			R0528700
21	Brush roller	R0517400		
22	Main housing 2WD ii	R0589100		
23	Roller support	R0518700		
24	Hood blue	R0544700		
	Hood blue Vortex 4			R0638500
25	Roller (Set of 2)	R0518100		
26	Screws 2,2*6,5 mm (x5)	R0564500		
27	Rampe	R0519000		
28	Motor block Type a	R0637800		
	Motor block Type b			R0637900
29	V4 remote Control	W1889A		
30	Control unit Vortex™ 2	R0637300		
	Control unit Vortex™ 3		W1888B	
	Generic command box			W2076B
31	Floating cable clamp (Set of 5)	R0567900		
32	cover latch grip pms108	R0638700		
33	Transmission	R0517200		
34	Floating cable plug	R0565600		
35	V4 remote Control	-		W2037A
36	Control unit base	R0662600		
-	Protective cover (for w1889A caddy)	W1581B		

Indigo™

Spare Parts

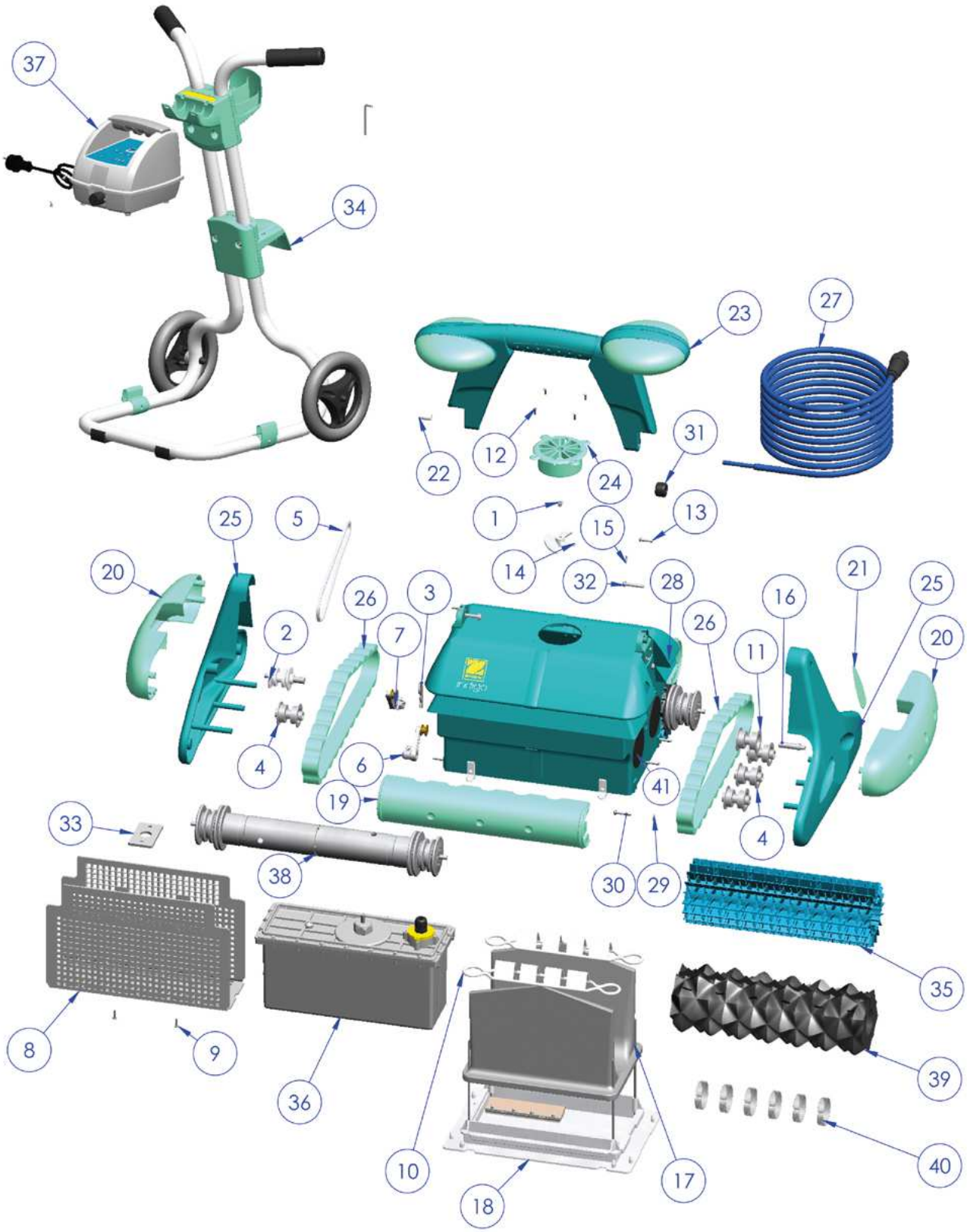

Position	Description	Reference
1	Handle Cap Diam 6mm *	W0002A
2	Motor Shaft Pulley	W0010A
3	Beta Pin*	W0011A
4	Long Track Guide Pulley	W0013A
5	Transmission Belt	W0014A
6	S Shaped Belt Tensioner	W0037A
7	C Shaped Belt Tensioner	W0038A
8	Motor Casing Protection Grid*	W0044A
9	Screw VT TCL Pozi 3.5X13 A2*	W0090A
10	filter Bag Blocking Peg	W0095A
11	Short Track Guide Pulley	W0121A
12	Screw VT TFC Pozi 2.9X9.5 A2*	W0351A
13	Screw VT TCL Pozi 3.5X19 A2*	W0375A
14	Swr white Propeller Dia 64*	W0435A
16	Axle Pulley Track *	W1125A
17	AF2 filter Bag With Eyeholes	W1187B
18	Complete 1E filter Holder white	W0027D
19	Green Front Bumper *	W1208A
20	Green Side Bumper *	W1209A
21	Drip Loop Adhesive *	W1214A
22	Handle Spacer *	W1216A
23	Complete Handle	W1219A
24	Blue Indigo™ Flow Guide	W1220A
25	Indigo™ C Track cover	W1221A
26	Blue Track	W1222A
27	18M-8-4Pt P299 Floating cable *	W1226A
28	Complete Indigo™ body *	W1286A
29	Washer M4 A2 *	W0017A
30	Screw VT TCL Pozi 3.9X25 A2 *	W0164A
31	DM8 Cable Tightener Black *	W1215A
32	Screw VM TCL Pozi 5X30 A4 *	W1412A
33	Stainless Steel Weight *	W1521A
34	Europe Indigo™ Caddy *	W1534A
35	Blue Blade Brush (Set of 2)	W1585A
36	2M 2008 Motor Block	W1655A
37	Generic 08 Control Box	W1671B
38	Brush Holder	W0018A
39	Black Foam Brush PPI 60	W0887A
40	Foam Fixing Clip	W0139A
41	Shell Round Valve Black	W0019B
-	AF2 filter Bag With Eyeholes	W1187B
	Large debris filter bag *	W1579A
	Ultra fine debris filter bag *	W1583A
	Black Foam Brush PPI 60	W0887A
	6 Foam clips	W0889A
	Rubber Brush Black	W1586A
	Blue Blade Brush (Set of 2)	W1585A

*Until the stocks are exhausted

Lazernaut

Spare Parts

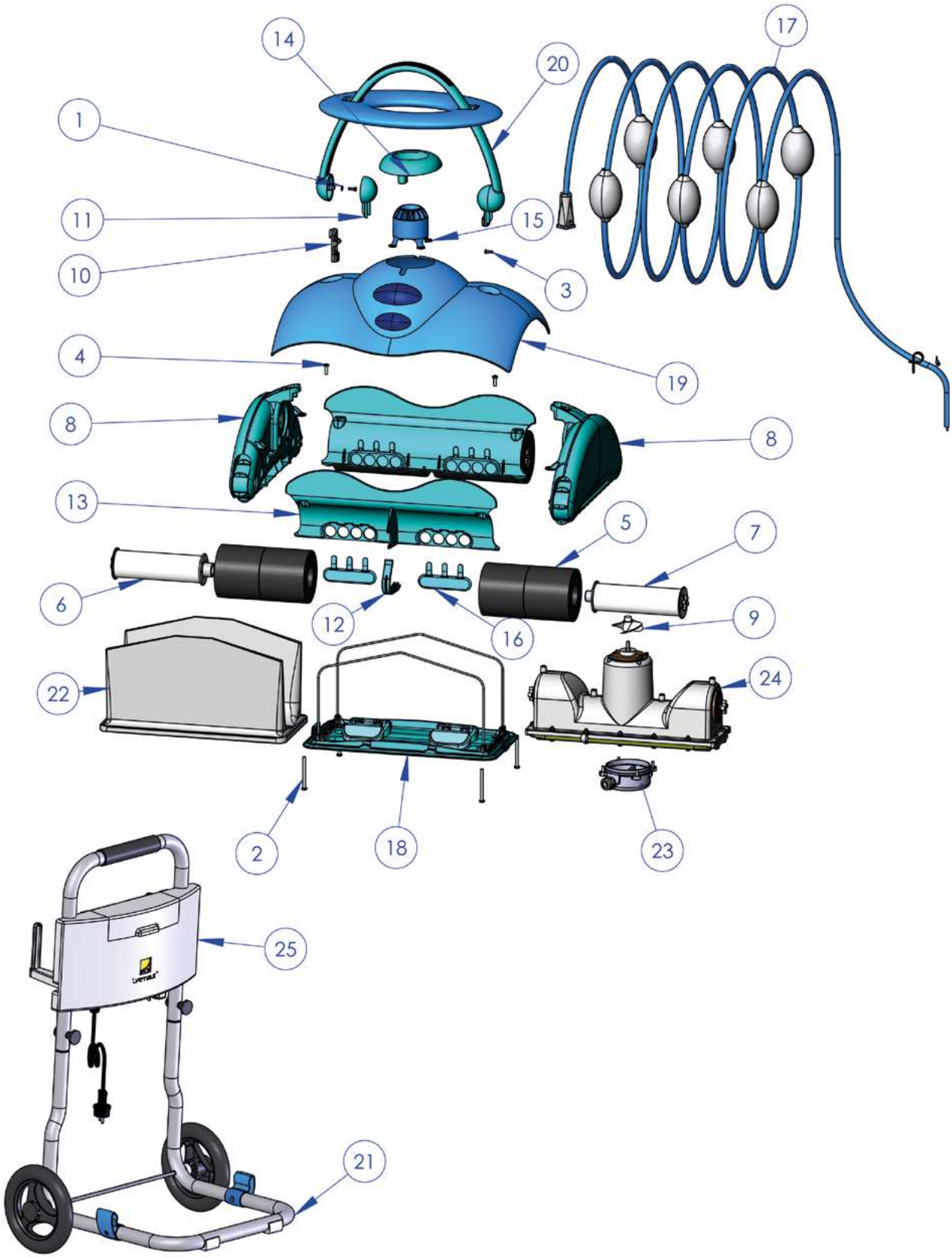

Position	Description	Reference
1	Washer M4 A2 *	W0017A
2	Screw VP pozi 5x60 A2 *	W1024B
3	Screws 4*12 mm (x5)	R0516700
4	Screw VP TCL pozi 5X16 A2 *	W1026A
5	Foam pad (Set of 8)	W1596A
6	Foam Brush SW2 Large Ø	W1047A
7	Foam Brush SW2 SMALL Ø	W1053A
8	grey SW2 Gear Cartridge	W1421A
9	Propeller SW2 *	W1067A
10	Handle swivel joint SW2 *	W1084A
11	Handle clip Lazernaut *	W1085A
12	Roller clip Lazernaut *	W1086A
13	Cross-bar Lazernaut *	W1087A
14	Deco flow guide Lazernaut *	W1091A
15	Flow guide Lazernaut *	W1092A
16	Drain valve Lazernaut *	W1093A
17	Cable FLO SW2 17M turquoise *	W1102A
18	Complete grey SW2 filter Holder	W1422B
19	cover Lazernaut *	W1163A
20	Complete Handle Lazernaut *	W1165A
21	Complete Trolley Lazernaut BLC *	W1167D
22	Ultra fine debris filter bag *	W1583A
23	Round relay box kit	W1507A
24	Complete motor block SW2 NB2	W1508C
25	Control box LZ 2010 *	W1979A

*Until the stocks are exhausted

Sweepy® Free

Spare Parts

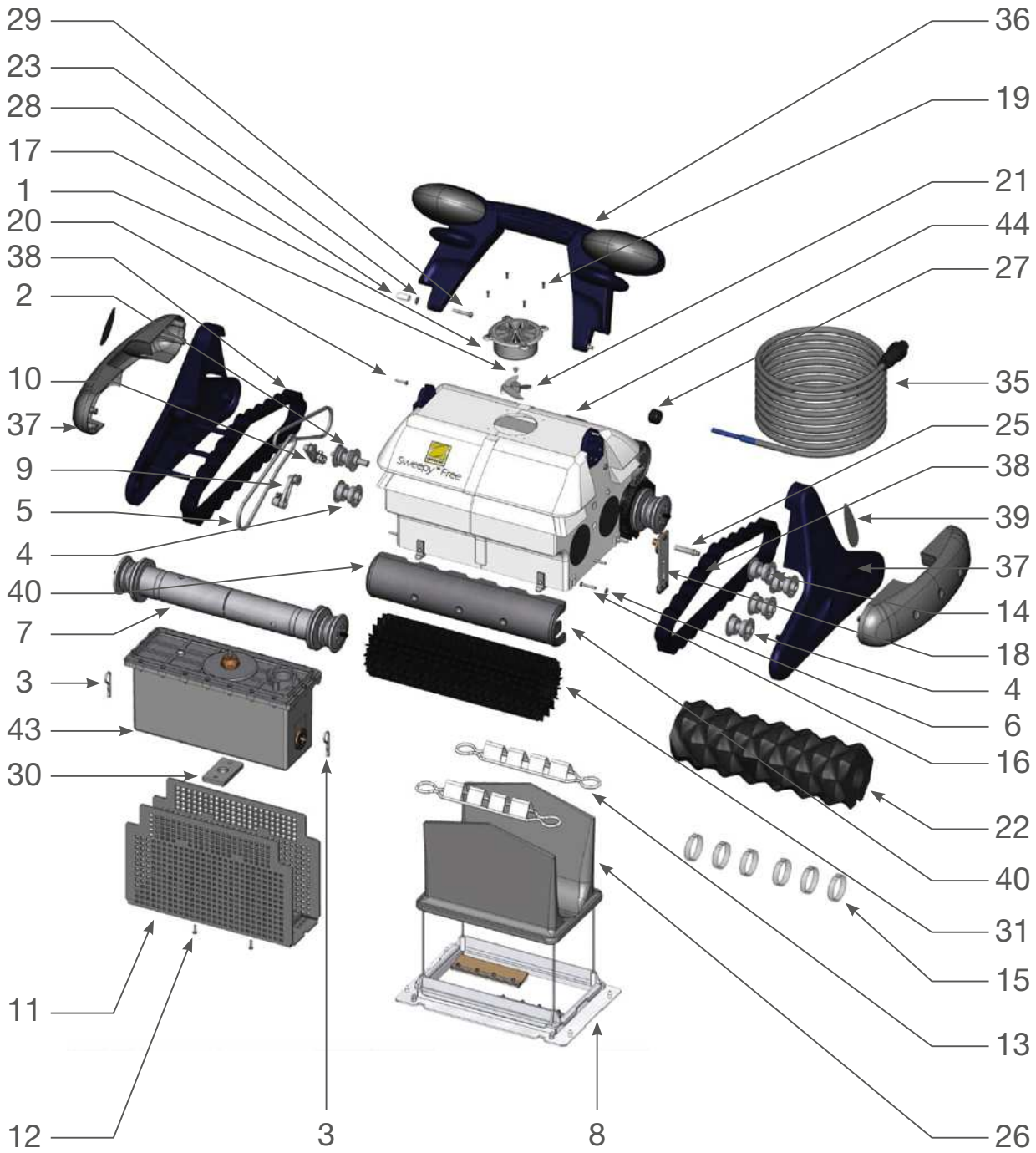

Position	Description	Reference
1	Handle Cap Diam 6mm *	W0002A
2	Motor Shaft Pulley	W0010A
3	Beta Pin *	W0011A
4	Long Track Guide Pulley	W0013A
5	Transmission Belt	W0014A
6	Washer M4 A2 *	W0017A
7	Brush Holder	W0018A
8	Complete 1E filter Holder white	W0027D
9	S Shaped Belt Tensioner	W0037A
10	C Shaped Belt Tensioner	W0038A
11	Motor Casing Protection Grid *	W0044A
12	Screw VT TCL Pozi 3.5X13 A2 *	W0090A
13	filter Bag Blocking Peg	W0095A
14	Short Track Guide Pulley	W0121A
15	Foam Fixing Clip	W0139A
16	Screw VT TCL Pozi 3.9X25 A2 *	W0164A
17	Flow Outletwhite *	W0233A
18	Turn Foot Set	W0344B
19	Screw VT TFC Pozi 2.9X9.5 A2 *	W0351A
20	Screw VT TCL Pozi 3.5X19 A2 *	W0375A
21	Swr white Propeller Dia 64 *	W0435A
22	Black Foam Brush PPI 60	W0887A
23	Washer M5 A2 *	W1096A
25	Axle Pulley Track *	W1125A
26	AF2 filter Bag With Eyeholes	W1187B
27	DM8 Cable Tightener Black *	W1215A
28	Handle Spacer *	W1216A
29	Screw VM TCL Pozi 5X30 A4 *	W1412A
30	Stainless Steel Weight *	W1521A
31	Rubber Brush Black	W1586A
32	Sweepy Free Command Box *	W1560A
33	3M Remote Control *	W1618A
34	Complete Sweepy FreeTrolley *	W1633A
35	Floating cable 16M-8-4Pt PCG 8 *	W1636B
36	Complete C Handle Dark Blue *	W1638A
37	Track Flange Blue *	W1640A
38	Dark Blue Track	W0015B
40	Front Bumper grey *	W1340A
41	Side Bumper grey *	W1341A
43	3M Complete Motor Block *	W1757A
44	Complete Shell *	W1758A
-	AF2 filter Bag With Eyeholes	W1187B
	Large debris filter bag *	W1579A
	Black Foam Brush PPI 60	W0887A
	6 Foam clips	W0889A
	Rubber Brush Black	W1586A

*Until the stocks are exhausted

Cybernaut™ NT 17M & 25M

Spare Parts

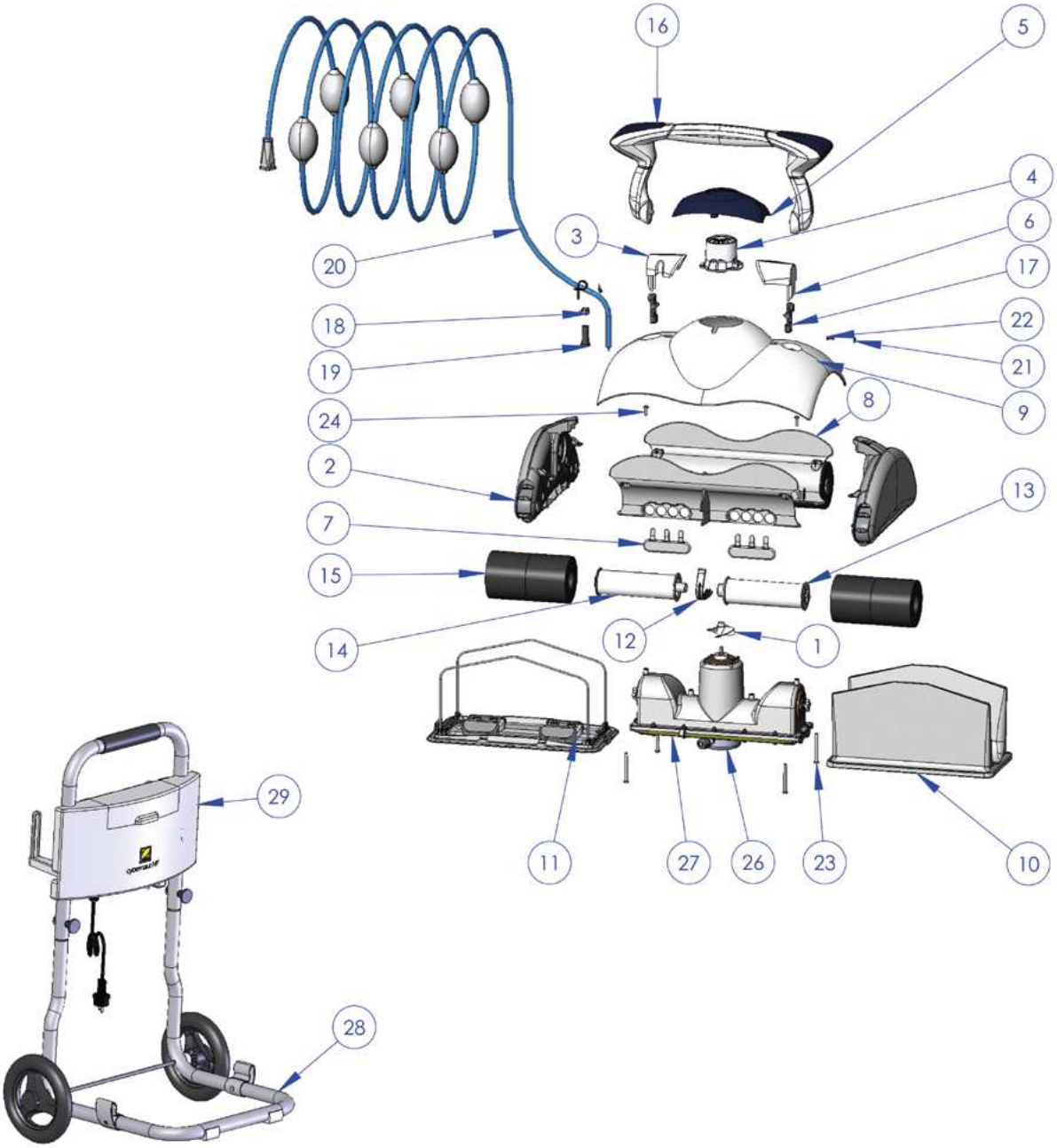

Position	Description	Reference
1	Propeller SW2 *	W1067A
2	grey SW2 Gear Cartridge	W1421A
3	white Right Handle Clip *	W1436A
4	white Flow Guide *	W1442A
5	Blue Flow Guide Deco *	W1441A
6	white Left Handle Clip *	W1435A
7	grey SW2 Outlet Valve *	W1443A
8	grey SW2 Cross Part *	W1438A
9	white Cnt cover *	W1518B
10	Ultra fine debris filter bag	W1583A
11	Complete grey SW2 filter Holder	W1422B
12	grey SW2 Roller Clip	W1437A
13	Foam Brush SW2 Large Ø	W1047A
14	Foam Brush SW2 SMALL Ø	W1053A
15	Foam pad (Set of 8)	W1596A
16	Complete white Handle *	W1439A
17	Handle swivel joint SW2 *	W1084A
18	Belt Tightening Collar And Screw *	W0093A
19	Cnt Cable Holder *	W1587A
20	SW2 17 grey Flo Cable	W1426A
21	Washer M4 A2 *	W0017A
22	Screws 4*12 mm (x5)	R0516700
23	Screw VP pozi 5x60 A2 *	W1024B
24	Screw VP TCL pozi 5X16 A2 *	W1026A
26	Round relay box kit	W1507A
27	Complete motor block SW2 NB2	W1508C
28	Complete Cybernaut Nt B Caddy *	W1505D
29	2010 Cnt Cont. Box	W1793B
-	Ultra fine debris filter bag	W1583A
	100 micron filter bag	W1584A
	PVA Brushes (set of 4)	W1582A
	Protective cover *	W1064P
20	grey Flo Cable SW2 25M *	W1570A

*Until the stocks are exhausted

Kontiki™ 2

Spare Parts

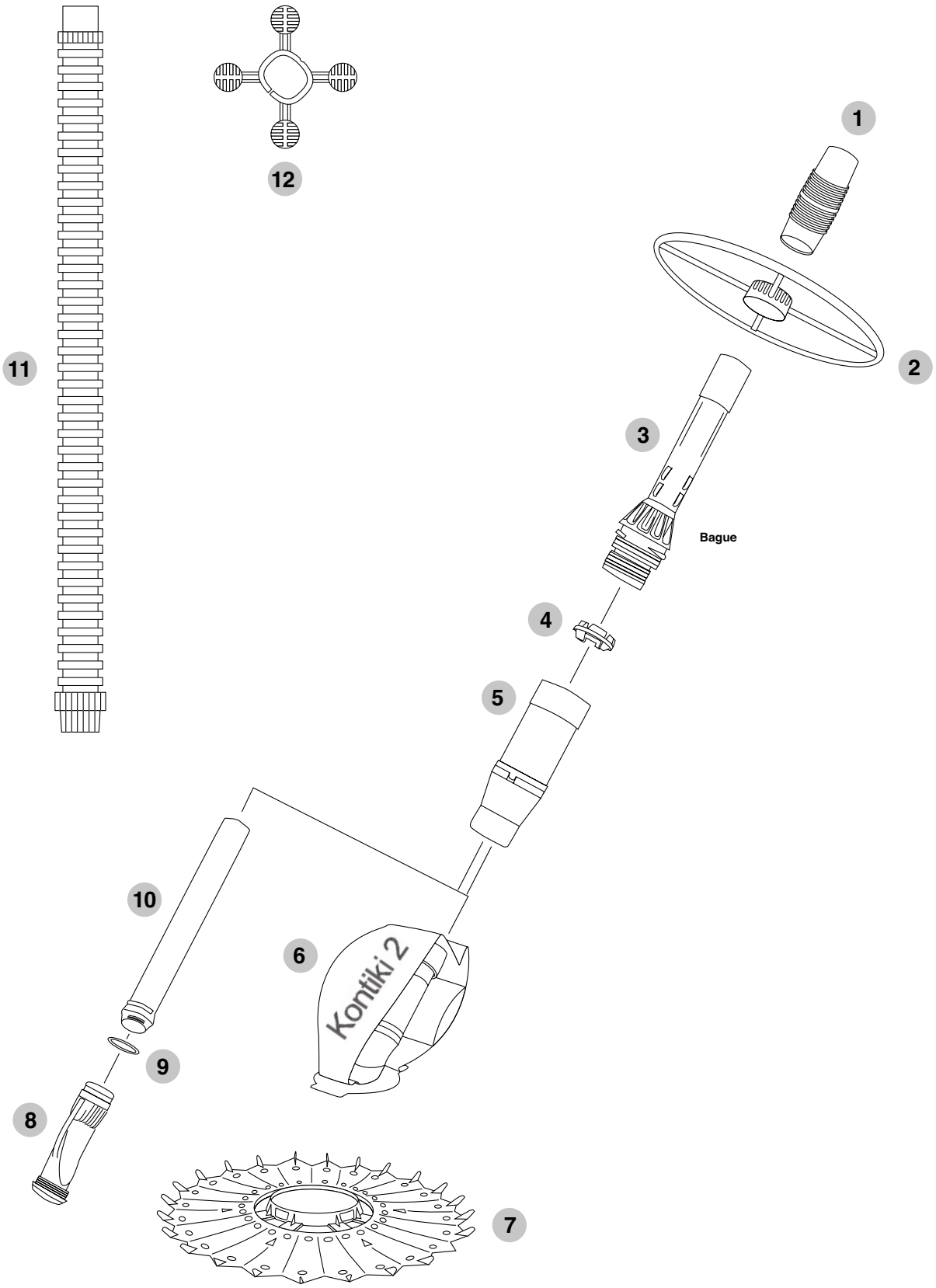

Position	Description	Reference
1	Hose Weir Adapter (Not In Product Box)	W32305P
2	Circular Deflector	W46005
3	External Exhaust Hose	W70247
4	Compression Ring	W74000P
5	Cartridge	W70475
6	Kontiki™ 2 body	W40922
7	Kontiki™ 2 Disc	W70473
8	Suction Valve	W69314
9	Compression Ring	W81600P
10	Inner Extension Pipe	W56525P
11	Set of 6 Bicolour 1M Long Life Hoses	W69100
12	Hose Deflector	W24206

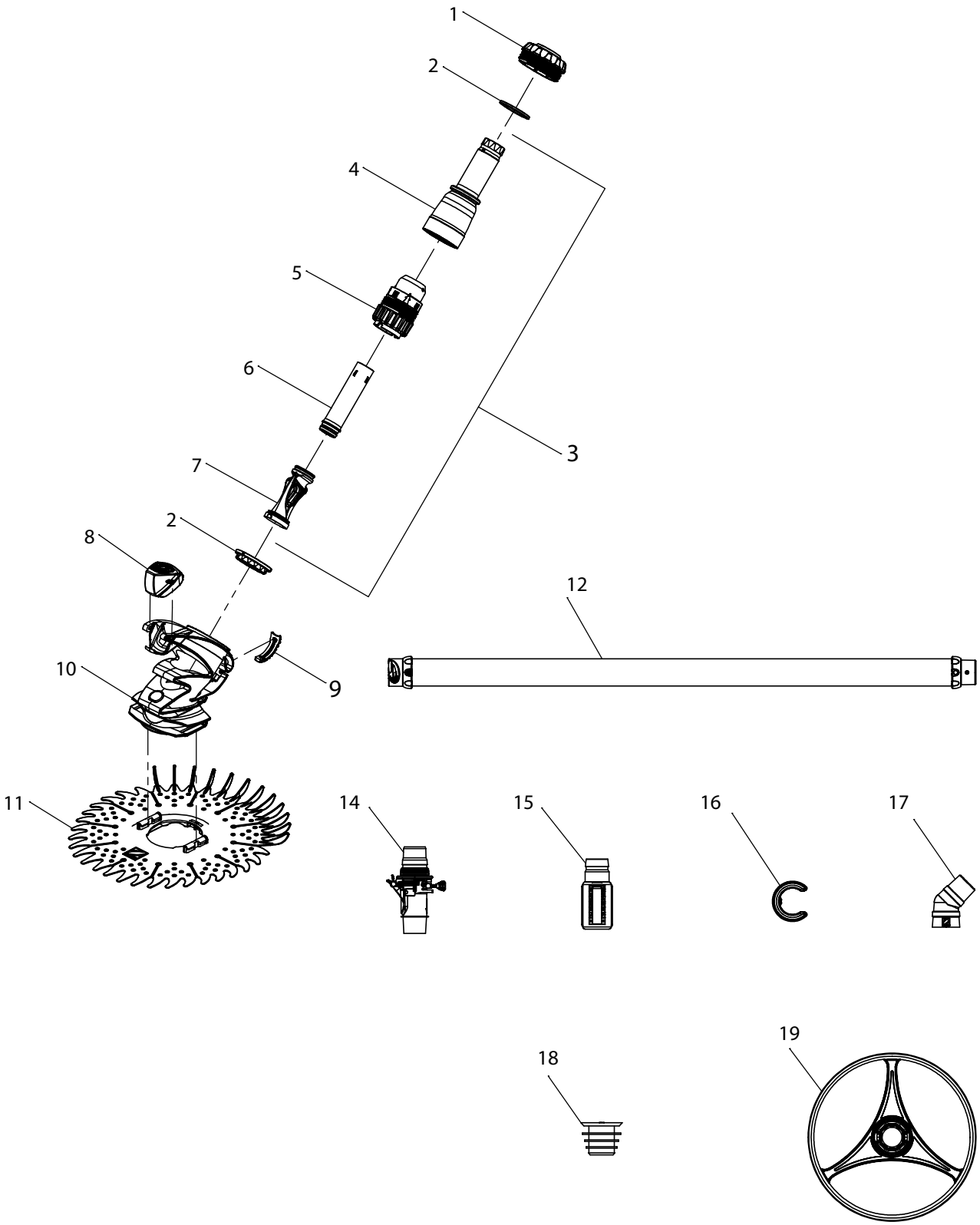
1
2
4
5
6
3
7
2
8
12
10
9
11
14
15
16
17
18
19

Position	Description	Reference
1	T3/B3/R3 Handnut	W70715
2	T3/B3/R3 Washers (Upper & Lower)	W70716
3	Cleaner internal assembly	W70717
4	External outlet hose	W70718
5	Cartridge	W70719
6	Internal outlet hose	W70720
7	Diacyclone diaphragm	W73010P
8	T3 Float	W70733
9	T3/B3/R3 Bumper	W70722
10	T3 body	W70734
11	T3/B3 Disc	W70724
12	Set of 6 x 1 m Twist Lock hoses	W78055
14	Automatic flow rate adjustment valve	W60055P
15	Flow rate tester	W70335P
16	Hose counterweight	W83247P
17	45-degree elbow	W70244
18	Conical adaptor	W69657P
19	Quick Release Wheel Deflector Assembly, Blue Iridium	W70730

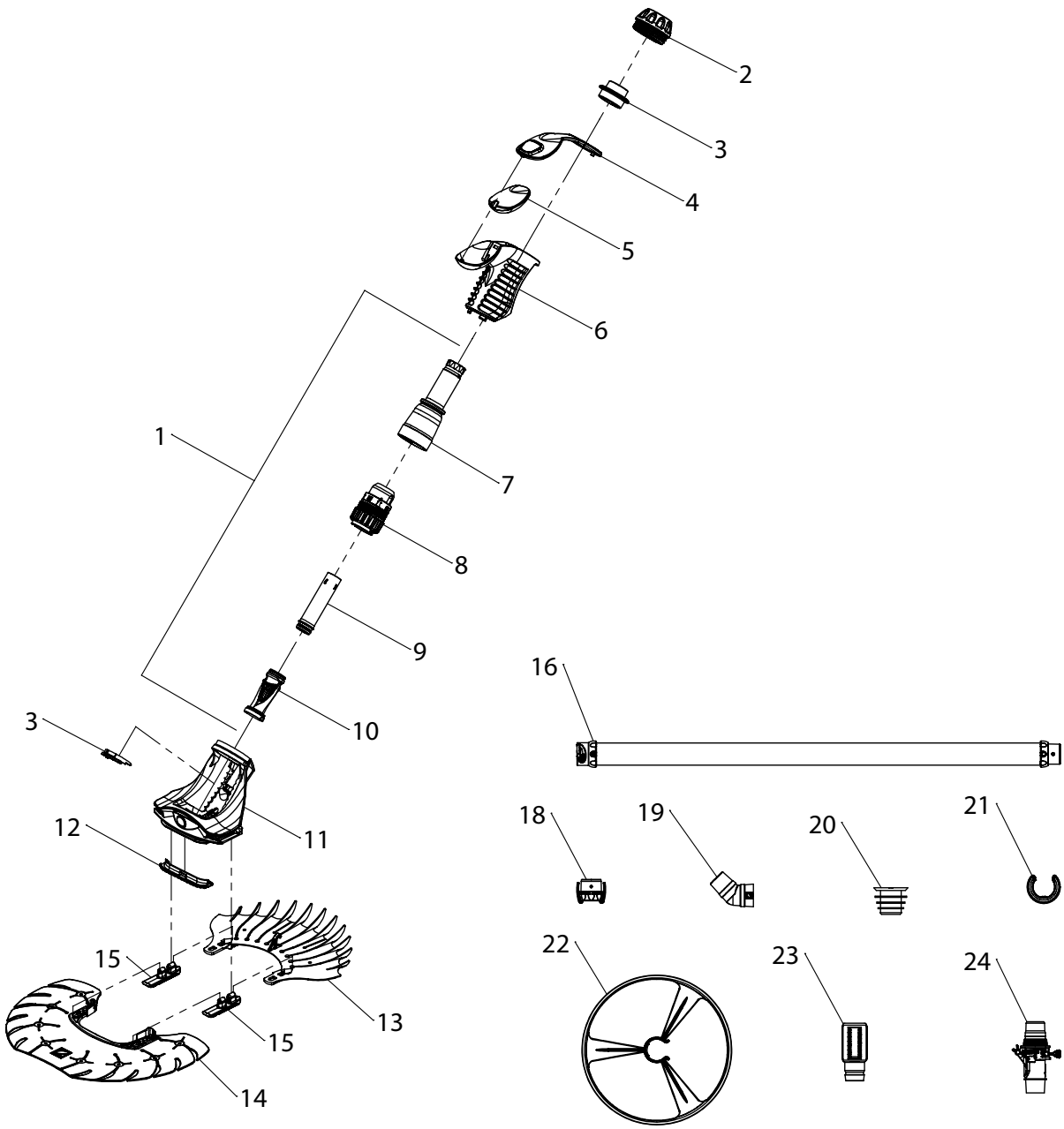
2
3
4
5
6
1
7
8
9
10
3
11
12
15
13
15
14
16
18
19
20
21
22
23
24

Position	Description	Reference
1	Cleaner internal assembly	W70717
2	Yellow ring	W78101
3	Compression Ring	W78005
4	Float upper part, silver	W78102
5	Float	W78014
6	Float lower part, blue	W78103
7	External outlet hose	W70718
8	Cassette	W70719
9	Internal outlet hose	W70720
10	Diacyclone diaphragm	W73010P
11	Blue body/head	W78104
12	Fender, silver	W78105
13	Front disc, silver	W78106
14	Rear disc, blue	W78107
15	Disc Connectors, silver	W78108
16	Set of 6 x 1 m Twist Lock hoses	W78055
18	Quick Connector, blue	W79033P
19	45-degree elbow	W70244
20	Conical adaptor	W69657P
21	Hose counterweight	W83247P
22	Anti-jamming wheel, blue	W78076
23	Flow rate tester	W70335P
24	Automatic flow rate adjustment valve	W60055P

MX8™ / MX8™ PRO / MX9™

Spare Parts

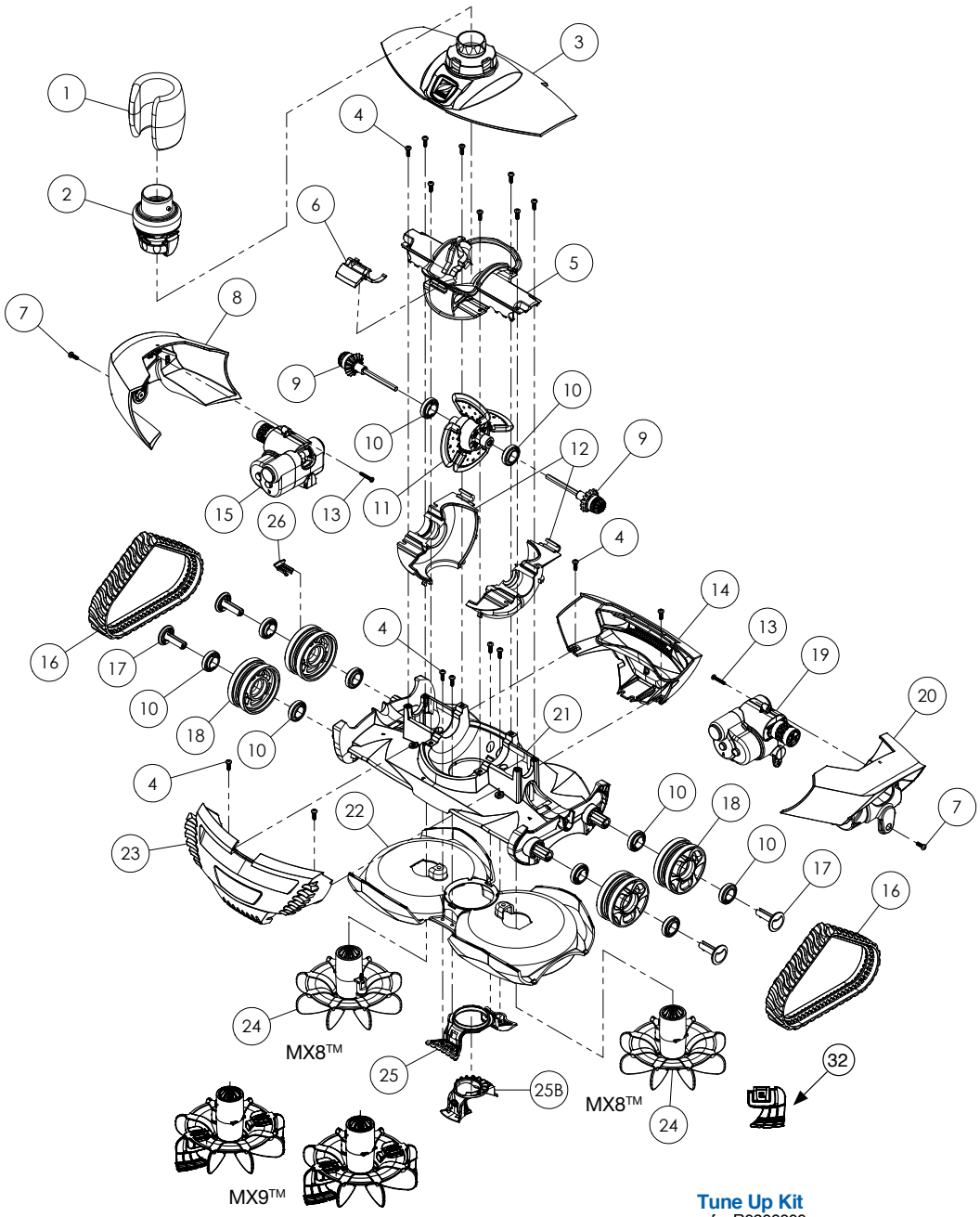

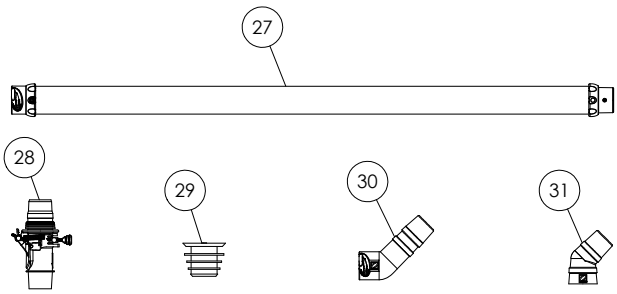

Tune Up Kit
ref : R0806000

Reference Zodiac®	Description	Qté
W79025	Track	2
W79013	Drive motor assembly	1
W79015	Drive shaft assembly	2
W79035	Screw m4x12mm phillips #2 pan head w/ nylon patch	2
W79012	Reversing assembly - side B	1
W79011	Reversing assembly - side A	1
W79034	Bearing (wheel & engine)	2

Position	Description	MX8™ / MX8™ PRO	MX9
1	Hose float	W79032P	
2	Flow regulator valve	60001100	
3	Top cover/swivel assembly	W79018	
4	Screw m4x12mm phillips #2 pan head	W79035	
5	Middle drive motor housing	W79066	
	Engine Seal	W79029	
	Engine Ramp	W79028	
6	cover latch 1	W79027	
7	Screw m4x12mm phillips #2 pan head	W79035	
8	body panel - right	W79030	
9	Drive Shaft assembly	W79015	
10	Bearing (wheel & engine)	W79034	
11	Drive motor assembly	W79013	
12	Lower drive motor housing - side A & side B	W79022	
13	Screw thread forming #6-18 7/8in Type a phillips #2 pan head	W79036	
14	body panel - rear	W79020	
15	Reversing assembly - side B	W79012	
16	Track	W79025	
17	Wheel pin	W79065	
18	Wheel	W79024	
19	Reversing assembly - side A	W79011	
20	body panel - left	W79031	
21	chassis assembly	W79062	
22	Lower body housing	W79021	
23	body panel - front	W79019	R0773500
24	scrubber assembly	W79014	
	Turbines Kit + brushes (set of 2)		R0756300
25	Inlet assembly	W79017	
25B	Regular opening	W79047P	
26	Wheel speed indicator	A0235200	
27	Set of 6 x 1 m Twist Lock hoses	W78055	
28	Automatic flow rate adjustment valve	W60055P	
29	Conical adaptor	W69657P	
30	Twist-lock 45 deg elbow extended	W73011P	
31	45-degree elbow	W70244	
32	MX scrubbing Brushes (*4)	-	R0773600
	Quick Connector, blue	W79033P	
-	Leaf Trap (non contractual photos. Photo page 94)	W37110	

Spa Wand

Spare Parts

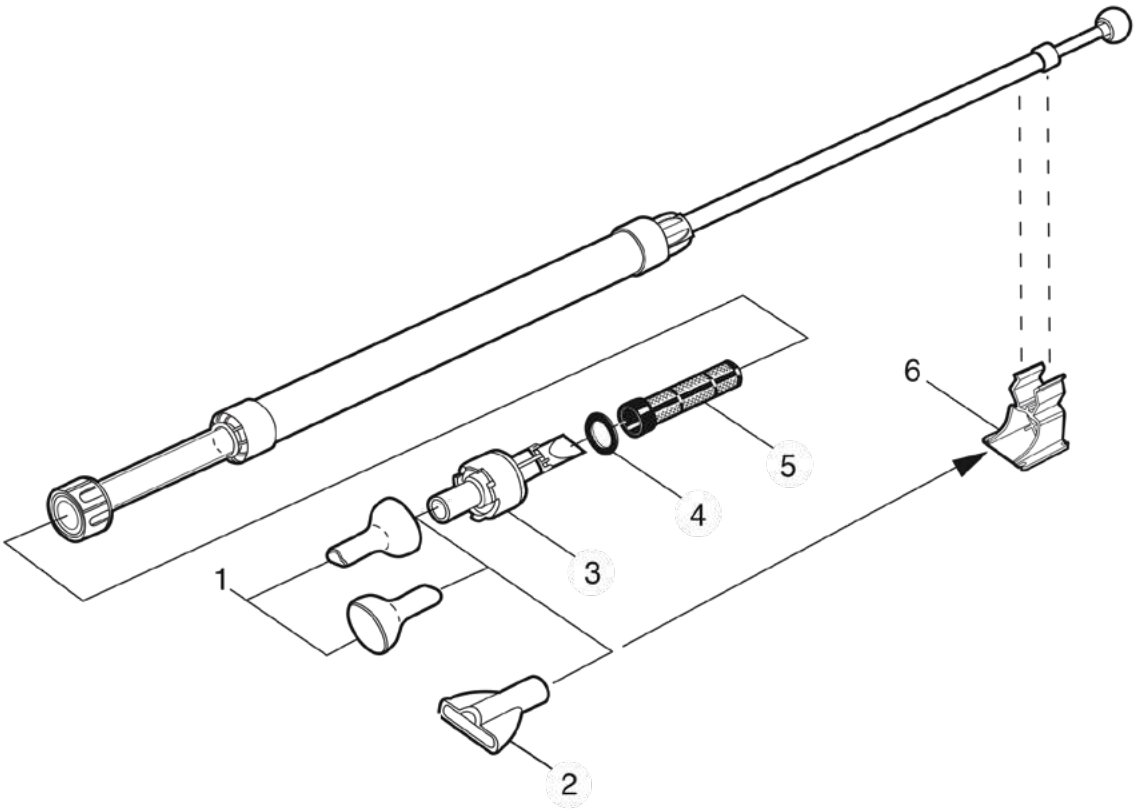

Position	Description	Reference
1	Nozzle, Dual Purpose 1 DISC	W9330003
2	Nozzle, Wide Sweep 1 $3.25	W9330001
3	End Cap and Valve Assembly	W9330004
4	filter Screen 1 $13.46	W9330006
5	Bracket, Wall 1 DISC	W9330002

Polaris® Quattro Sport

Spare Parts

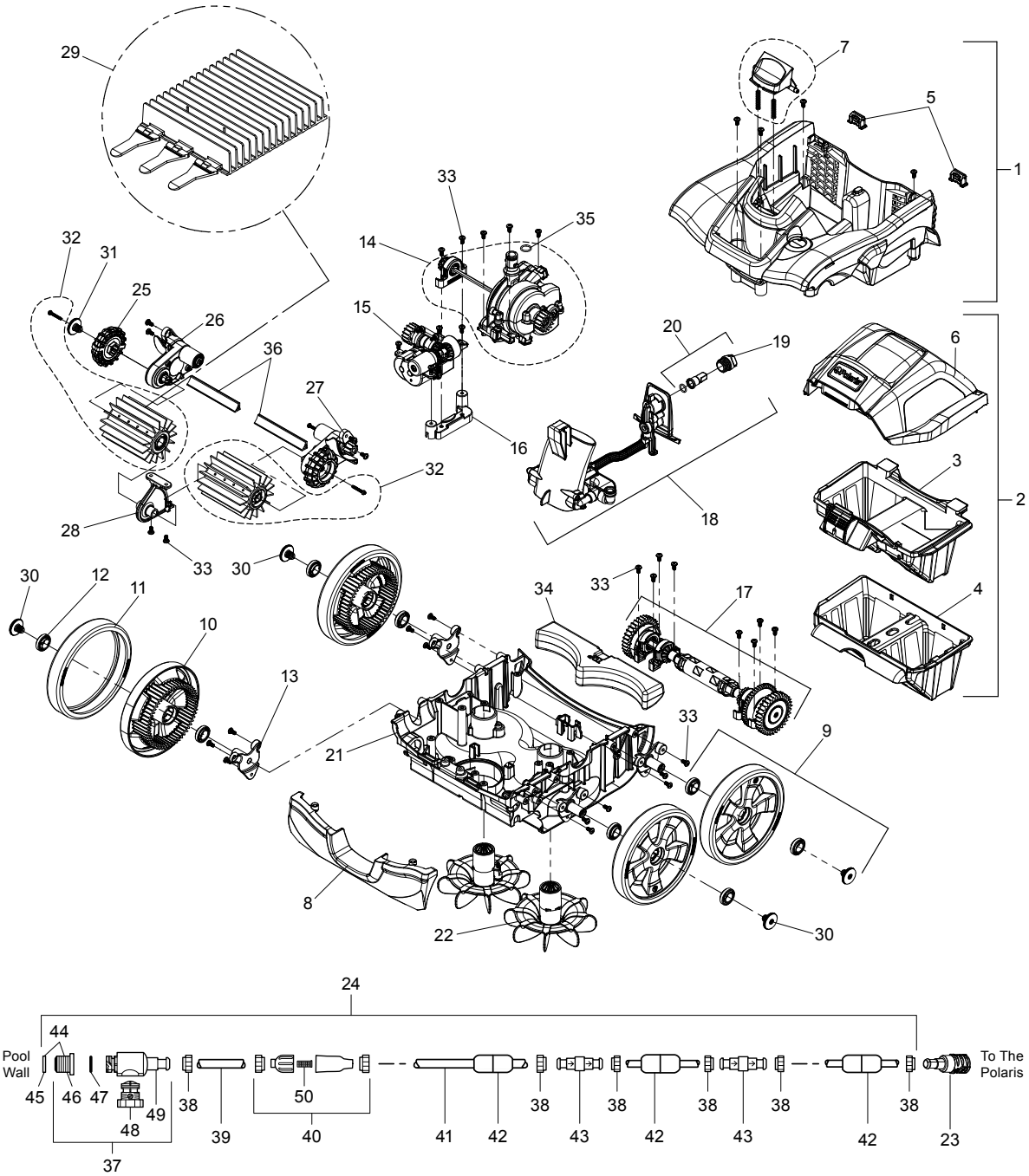

STANDARD PARTS

Position	Description	Reference Zodiac®	Reference Polaris®	Unit / Pack
1	Main Housing, Blue	R0836100	R0836100	1
2	Filter Canister Assembly, Blue	R0836200	R0836200	1
3	All-Purpose Filter Canister	R0836300	R0836300	1
4	Fine Filter Canister	R0836400	R0836400	1
5	Latch, Rear Canister, 2/PK	R0836500	R0836500	2
6	Canister Top, Blue	R0836600	R0836600	1
7	Latch, Main Housing w/ Springs	R0836700	R0836700	1
8	Panel, Front	R0836800	R0836800	1
9	Wheel/Tire Assembly	R0836900	R0836900	1
10	Wheel	R0837000	R0837000	1
11	Tire, Max Trax, Black	W7230255	W7230255	1
12	Ball Bearing, Wheels	W7230223	W7230223	1
13	Axle	R0837100	R0837100	1
14	Engine Assembly w/ O-Ring	R0837200	R0837200	1
15	Gearbox Assembly	R0837300	R0837300	1
16	Bracket, Gearbox Support	R0837400	R0837400	1
17	Drive Shaft Assembly	R0837500	R0837500	1
18	Water Management System	R0837600	R0837600	1
19	Nut, Thrust Jet	R0837700	R0837700	1
20	Thrust Jet Assembly	R0837800	R0837800	1
21	Chassis (Warranty Only)	R0837900	R0837900	1
22	Cyclonic Turbine Quattro	R0838000	R0838000	1
23	Connector, Feed Hose Assembly, Black	R0838100	R0838100	1
24	Feed Hose Assy Complete w/ UWF, No Back-Up Valve, No In-Line Filter, Black	W7230333	W7230333	1
25	Side Brush, 2/PK	R0838300	R0838300	2
26	Side Brush, Gearbox (Right)	R0838400	R0838400	1
27	Side Brush, Gearbox (Left)	R0838500	R0838500	1
28	Roller Brush Support	R0838600	R0838600	1
29	Brush, 2/PK	R0838700	R0838700	2
30	Retainer Screw, 2/PK, Silver	R0838800	R0838800	2
31	Retainer Screw, 2/PK, Black	R0838801	R0838801	2
32	Roller Brush Assembly, 2/PK	R0838900	R0838900	2
33	Screw, 10-32 x 3/8” SS Pan Head, 10/PK	W7230220	W7230220	10
34	Float, Rear Lower (Internal)	R0841900	R0841900	1
35	O-Ring, Feed Hose Connector	R0842000	R0842000	1
36	Brush Guard, 2/PK	R0853100	R0853100	2
37	UWF Connector Assy, Black	W7230341	W7230341	1
38	Nut, Feed Hose, Black	W7230328	W7230328	1
39	Adapter Hose, 8 1/2” Lg. Black	R0616100	R0616100	1
40	In-Line Filter Assembly, Black 1 1	W7330316	W7330316	1
41	Feed Hose, 10’, Black 3 1	W7230331	W7230331	1
42	Float, Feed Hose, Black 10 1	W7230327	W7230327	1
43	Swivel, Ball Bearing, Black 2 1	W7230329	W7230329	1
44	UWF Restrictor Kit 1 KIT	W7330325	W7330325	1
45	UWF Restrictor Disks, Red & Blue 2 KIT	W7230325	W7230325	1
46	Universal Wall Fitting (UWF®), Black 1 1	W7230338	W7230338	1
47	O-Ring, UWF 1 1	W7230319	W7230319	1
48	Pressure Relief Valve, Black 1 1	W7230342	W7230342	1
49	Quick Disconnect, UWF, Black 1 1	W7230330	W7230330	1
50	Screen, In-Line Filter 1 1	W7430231	W7430231	1

Polaris® 3900 Sport

Spare Parts

Pressure cleaner

Operates from a vacuum point with a Polaris® booster pump

▶ TailSweep Pro® accessories avalaible p. 49

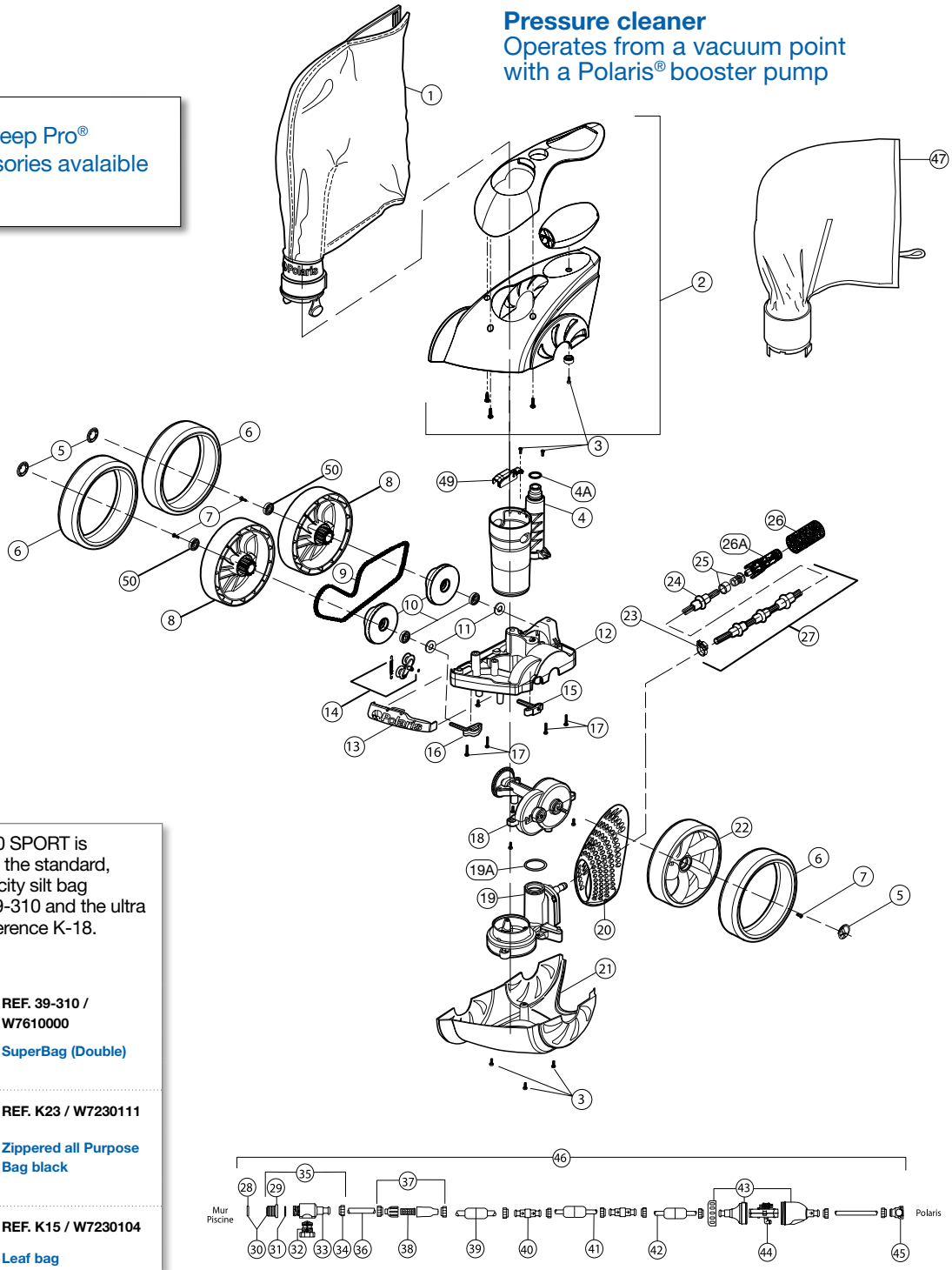

BAGS

Polaris® 3900 SPORT is shipped with the standard, double capacity silt bag Reference 39-310 and the ultra fine bag Reference K-18.

REF. 39-310 / W7610000

SuperBag (Double)

REF. K23 / W7230111

Zippered all Purpose Bag black

REF. K15 / W7230104

Leaf bag

REF. K18 / W7230109

Black sand & silt bag

Position	Description	Reference Zodiac®	Reference Polaris®	Unit / Pack
1	SuperBag (Double)	W7610000	39-310	1
2	Upper cover kit with handle and float	W7620010	39-003	1
	Float	R0538000	R0538000	1
3	Screw, 10-32 X 3/8» ss pan Head (X10)	W7230220	C40	10
4	Vaccum tube/feedpipe assy with O-ring	W7620025	39-006	1
4A	O-ring	W7430230	48-141	1
5	Hubcap (set of 3)	W7640000	39-008	3
6	Wide trax tire®, Black	W7430237	48-232	1
7	wheel Lock screw (set of 3)	W7430218	48-036	3
8	Double-side wheel w/Bearing	W7640040	39-410	1
9	Chain	W7640020	39-126	1
10	Wheel sprocket assy w/Bearing	W7640045	39-420	1
11	Wheel spacer (set of 2)	W7640060	39-602	2
12	Frame	W7640080	39-100	1
13	Bumper	W7640010	39-111	1
14	Chain tensioner kit	W7640015	39-120	1
15	Rear axle Block assy	W7640050	39-430	1
16	Front axle Block assy	W7640055	39-440	1
17	Screw, 10-32 X 7/8» ss pan Head with star washer (set of 2)	W7430221	48-045	1
18	Gearbox assembly	W7640025	39-200	1
19	WMS assembly	W7640030	39-300	1
19A	O-ring for WMS assembly	R0544000	R0544000	1
20	Rear Housing	W7620020	39-005	1
21	Bottom Housing	W7620015	39-004	1
22	Single-side wheel	W7640035	39-401	1
23	Sweeping pipe collar	W7230253	B16	1
24	Sweep Hose wear ring, Blue (set of 8)	W7630000	39-021	8
25	Orifice tip w/ Orifice tip Guard	W7230208	B25	1
26	Sweep Hose scrubber	W7230245	9-100-3105	1
26A	Box of 12 Tail Sweep Pro®	W7220032	TSP10P	1
26A	Display unit for 18 Tail Sweep Pro®	W7220031	TSP10S	1
27	Sweep Hose Complete	W7630010	39-500	1
28	Uwf restrictor Disk, red & Blue 2	W7230325	10-112-00	1
29	Uwf restrictor Kit	W1230317	6-500-00	1
30	Uwf	W7330325	10-108-00	1
31	O-ring, uwf	W7230319	6-505-00	1
32	Pressure Relief Valve	W7230323	9-100-9002	1
33	Quick Disconnect, UWF	W7230304	D29	1
34	Nut, feed Hose, Gray	W7230302	D15	1
35	Uwf Connector assembly	W7230322	9-100-9001	1
37	In-line filter assembly	W7230316	48-080	1
38	Screen, In-Line filter	W7430231	48-222	1
39	Float, feed Hose, Gray	W7230301	D10	1
40	Swivel Ball Bearing, Gray	W7230303	D20	1
41	Feed Hose, 10ft., white	W7230305	D45	1
42	Leader Hose,10ft., Gray	W7230306	D50	1
43	Back-up Valve Kit	W7230308	G52	1
44	Mechanism for G52	W7230309	G53	1
45	Feed Hose Connector assembly	W7430229	48-140	1
46	Feed Hose assembly Complete	W7230307	G5	1
47	Black sand & silt bag	W7230109	K18*	1
49	Chain gard	R0537800	R0537800	1
50	Ball Bearing	W7330217	9-100-1108	1
	Tire, Positrax for fiberglass, black	W7430224	48-049	1
	Zippered all Purpose Bag black	W7230111	K23	1
	Leaf bag	W7230104	K15	1
	SuperBag (Double)	W7610000	39-310	1
	Zippered all Purpose Bag black	W7230111	K23	1
	Black sand & silt bag	W7230109	K18	1

Polaris® 280

Spare Parts

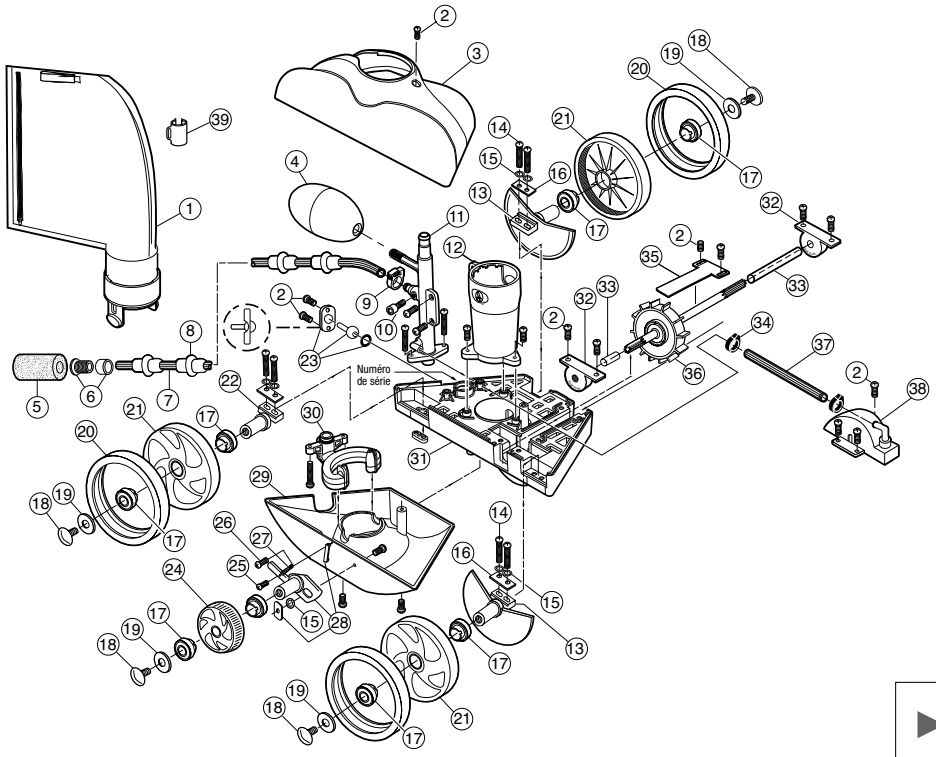

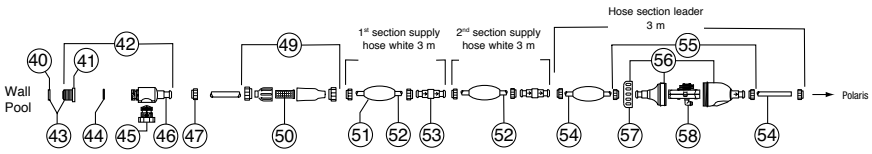

BAGS

The Polaris® 280 is supplied with the standard sand/silt bag. Reference K-13.

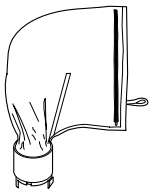

REF. K13 / W7230102

Zippered All-Purpose Bag

REF. K15 / W7230104

Leaf bag

REF. K14 / W7230103

Sand/Silt Bag

▶ TailSweep Pro® accessories avalaible p. 49

SPECIAL PARTS

Description	Reference Zodiac®	Reference Polaris®	Unit / Pack
Weight, Sweep Hose	W7230203	B2	1
Tire, PosiTrax® for fiberglass	W7230211	C13	1
Feed Hose assembly Complete	W7230307	G5	1
Accouplement 1 1/2” x 3/4”	W7230401	G9	1
Ladder Guard, 2 Panels	W7230412	G21	1
Pressure Tester w/o Gauge	W7230403	G35	1
O-ring Kit, Back-up Valve	W7230313	G58	1
Ultra-fine Bag	W7230103	K14	1
Leaf bag	W7230104	K15	1
Feed Hose with Floats	W7230320	9-100-3104	1
Street Ell	W7230407	9-100-9003	1
UWF Removal Tool, Plastic	W7230408	10-102-00	1
Tank Tracks® Kit	W7230212	C15	1
Tank Tracks®	W7230214	C18	1

KITS

Réf A-49/W7230002 Kit « train roulant »

Position	Reference Zodiac®	Reference Polaris®
13	W7230226	C66
17	W7230223	C60*
18	W7230222	C55*
19	W7230224	C64*
20	W7230210	C10*
21	W7230209	C6*
22	W7230225	C65
24	W7230213	C16*
28	W7230219	C36
32	W7230229	C80*
33	W7230230	C83
36	W7230231	C86

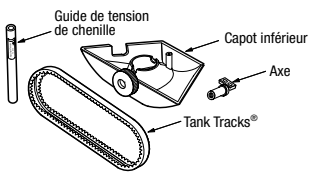

REF. C15 / W7230212

Tank Tracks® Kit

STANDARD PARTS

Position	Description	Reference Zodiac®	Reference Polaris®	Unit / Pack
1	Zippered All-Purpose Bag	W7230102	K13	1
2	Screw, 10-32 X 3/8» ss pan Head (X10)	W7230220	C40	10
3	Top, Blue	W7230235	K5	1
4	Float, Head	W7230201	A20	1
5	Sweep Hose scrubber	W7230245	9-100-3105	1
6	Orifice tip w/ Orifice tip Guard	W7230208	B25	1
7	Sweep Hose Complete	W7230204	B5	1
8	Wear Rings	W7230205	B10	1
9	Sweep Hose Attach Clamp	W7230206	B15	1
10	Adjustement Screw	W7230207	B20	1
11	Feed Pipe with Elbow	W7230243	K30	1
12	Vacuum tube	W7230237	K20	1
13	Axle, Large, with Sand/Gravel	W7230226	C66	1
14	Screw, 10-32 x 7/8» SS Pan Head (X2)	W7230228	C76	2
15	Lock Washer for C36 (X5)	W7130223	C45	5
16	Axle Plate for C65/C66	W7230227	C70	1
17	Ball Bearing, wheels	W7230223	C60	1
18	Wheel Screw, Plastic	W7230222	C55	1
19	Wheel Washer, Plastic (X2)	W7230224	C64	1
20	Tire Max Trax	W7230210	C10	1
21	Wheel, Large, No Bearings Incl	W7230209	C6	1
22	Axle, Large, Rear Wheel Only	W7230225	C65	1
23	Thrust Jet Kit	W7230234	C131	1
24	Idler Wheel, Small,	W7230213	C16	1
25	Screw, 4-40 x 3/16» SS Pan Head (X5)	W7230217	C30	5
26	Screw, 6-32 x 1/2» SS Pan Head (X5)	W7230218	C32	5
27	Spring for C36 (X2)	W7230216	C25	1
28	Swing Axle Kit	W7230219	C36	1
29	Bottom, white with Bracket (280)	W7230236	K10	1
30	Water Management System (280)	W7230238	K25	1
31	ASSEMBLY (EXCHANGE ONLY) 280	W7230247	K145	1
32	Ball Bearings, Turbine (280/18	W7230229	C80	1
33	Turbine Shaft tubes (280/180)	W7230230	C83	1
34	Hose Clamp for Water Management System (X6)	W7230246	9-100-7170	6
35	Turbine Shaft Shield	W7230202	A40	1
36	Drive Shaft Assembly	W7230231	C86	1
37	Hose for C110, 7-1/2»	W7230233	C120	1
38	Couvercle de turbine avec coude 90°	W7230232	C110	1
39	Bag Collar	W7230107	9-100-1018	1
40	Uwf restrictor Disk, red & Blue 2	W7230325	10-112-00	1
41	Uwf restrictor Kit	W1230317	6-500-00	1
42	Uwf Connector assembly	W7230322	9-100-9001	1
43	Uwf	W7330325	10-108-00	1
44	O-ring, uwf	W7230319	6-505-00	1
45	Pressure Relief Valve	W7230323	9-100-9002	1
46	Quick Disconnect, UWF	W7230304	D29	1
47	Nut, feed Hose, Gray	W7230302	D15	1
49	In-line filter assembly	W7230316	48-080	1
50	Screen, In-Line filter	W7430231	48-222	1
51	Float, feed Hose, Gray	W7230301	D10	1
52	Feed Hose, 10ft., white	W7230305	D45	1
53	Swivel Ball Bearing, Gray	W7230303	D20	1
54	Leader Hose,10ft., Gray	W7230306	D50	1
55	Back-up Valve Kit	W7230308	G52	1
56	Case Kit for G52	W7230310	G54	1
57	Collar, Back-up Valve	W7230312	G57	1
58	Mechanism for G52	W7230309	G53	1

Polaris® 380

Spare Parts

▶ TailSweep Pro® accessories avalaible p. 49

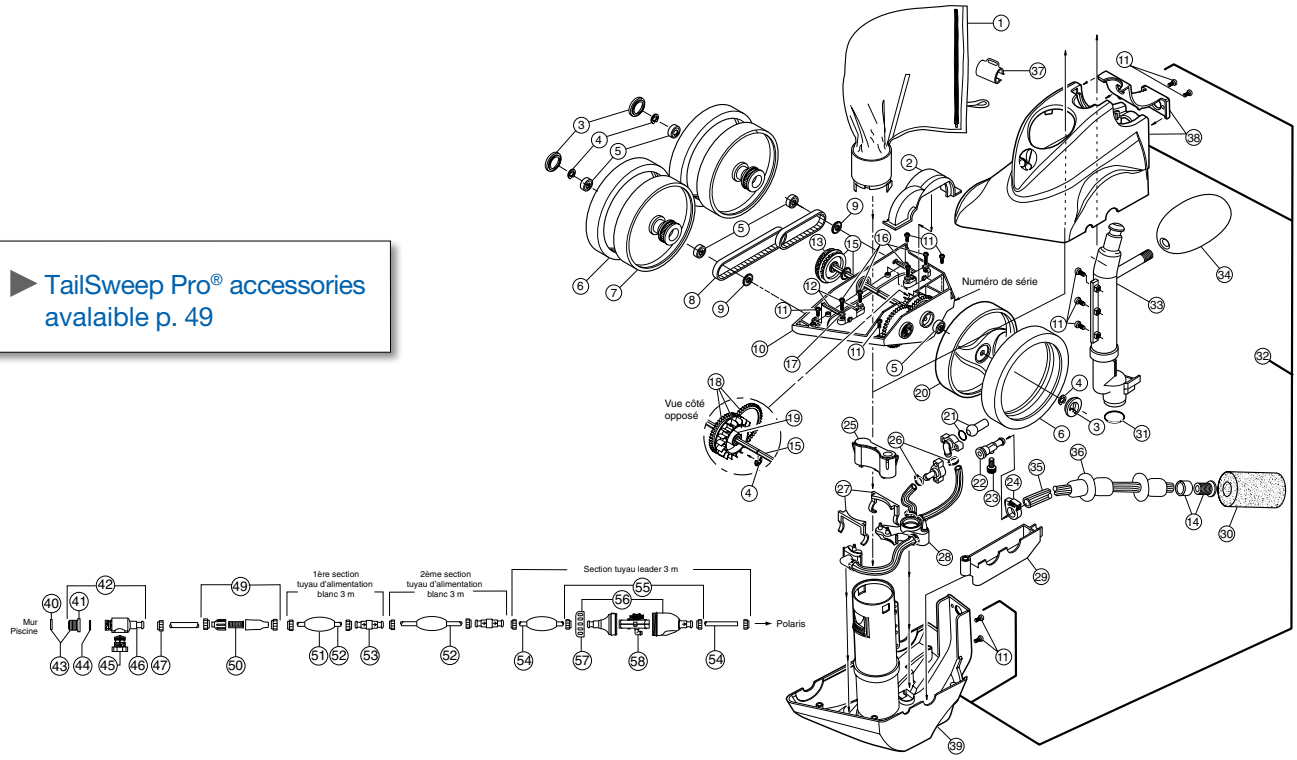

SPECIAL PARTS

Position	Description	Reference Zodiac®	Reference Polaris®	Unit / Pack
47	Nut, feed Hose, Gray	W7230302	D15	1
49	In-line filter assembly	W7230316	48-080	1
50	Screen, In-Line filter	W7430231	48-222	1
51	Float, feed Hose, Gray	W7230301	D10	1
52	Feed Hose, 10ft., white	W7230305	D45	1
53	Swivel Ball Bearing, Gray	W7230303	D20	1
54	Leader Hose,10ft., Gray	W7230306	D50	1
55	Back-up Valve Kit	W7230308	G52	1
56	Case Kit for G52	W7230310	G54	1
57	Collar, Back-up Valve	W7230312	G57	1
58	Mechanism for G52	W7230309	G53	1
	Weight, Sweep Hose	W7230203	B2	1
	Tire, PosiTrax® for fiberglass	W7230211	C13	1
	Screw, 10-32 X 3/8» ss pan Head (X10)	W7230220	C40	10
	Feed Hose assembly Complete	W7230307	G5	1
	Accouplement 1 1/2” x 3/4”	W7230401	G9	1
	Ladder Guard, 2 Panels	W7230412	G21	1
	Pressure Tester w/o Gauge	W7230403	G35	1
	O-ring Kit, Back-up Valve	W7230313	G58	1
	Leaf Bag	W7330101	9-100-1012	1
	Sand/Silt Bag	W7330103	9-100-1015	1
	Feed Hose with Floats	W7230320	9-100-3104	1
	Street Ell	W7230407	9-100-9003	1
	Polaris Vac-Sweep® 380/360 Factory Tune Up Kit	W7330001	9-100-9010	1
	Back up valve convertion Kit	W7330241	9-100-9040	1
	UWF Removal Tool, Plastic	W7230408	10-102-00	1

STANDARD PARTS

Position	Description	Reference Zodiac®	Reference Polaris®	Unit / Pack
1	Zippered All-Purpose Bag	W7330105	9-100-1021	1
2	Housing, Turbine Upper	W7330222	9-100-1152	1
3	Hub Cap (X3)	W7330218	9-100-1114	1
4	E-clip, Stainless Steel (X5)	W7330226	9-100-5107	5
5	Ball Bearing	W7330217	9-100-1108	1
6	Tire Max Trax	W7230210	C10	1
7	Wheel, Double-side	W7330213	9-100-1008	1
8	Belt Kit, Small and Large	W7330215	9-100-1017	1
9	Shield, Bearing	W7330236	9-100-7011	1
10	ASSEMBLY	W7330244	9-100-1005	1
11	Screw, 8-32 x 1/2» SS Pan Head	W7330229	9-100-5125	5
12	Axle Block Kit (Front and Rear)	W7330221	9-100-1139	1
13	Belt Divider, Transfer Pulley	W7330214	9-100-1010	1
14	Orifice tip w/ Orifice tip Guard	W7230208	B25	1
15	Transfer Pulley/Drive Shaft Assembly	W7330212	9-100-1007	1
16	Screw, 8-32 x 3/4» SS Pan Head (X5)	W7330228	9-100-5115	5
17	Lock Washer, Axle Block (X4)	W7330230	9-100-5130	4
18	Drive Train Gear Kit with Turbine Bearing	W7330220	9-100-1132	1
19	Turbine Wheel with Bearing	W7330216	9-100-1103	1
20	Wheel, Single-side	W7330219	9-100-1116	1
21	Thrust Jet Kit	W7230234	C131	1
22	Sweep Hose Barb Complete	W7330233	9-100-7008	1
23	Adjustement Screw	W7230207	B20	1
24	Sweep Hose Attach Clamp	W7230206	B15	1
25	Base Weight	W7330240	9-100-9004	1
26	Hose Clamp for Water Management System (X6)	W7230246	9-100-7170	6
27	Jet Retainer (X2)	W7330234	9-100-7009	2
28	Water Management System	W7330235	9-100-7010	1
30	Sweep Hose scrubber	W7230245	9-100-3105	1
31	O-ring, In-head Timer/Feed Pipe Assembly	W7330231	9-100-5132	1
32	Top and Base Assembly	W7330238	9-100-7030	1
33	Feed Pipe/Timer Blank Assembly	W7330232	9-100-7003	1
34	Float, Head	W7230201	A20	1
35	Sweep Hose Complete	W7230204	B5	1
36	Wear Rings	W7230205	B10	1
37	Bag Collar	W7230107	9-100-1018	1
38	Top Housing	W7330224	9-100-1240	1
39	Base Assembly	W7330237	9-100-7026	1
40	Uwf restrictor Disk, red & Blue 2	W7230325	10-112-00	1
41	Uwf restrictor Kit	W1230317	6-500-00	1
42	Uwf Connector assembly	W7230322	9-100-9001	1
43	Uwf	W7330325	10-108-00	1
44	O-ring, uwf	W7230319	6-505-00	1
45	Pressure Relief Valve	W7230323	9-100-9002	1
46	Quick Disconnect, UWF	W7230304	D29	1

Booster Pump

Spare Parts

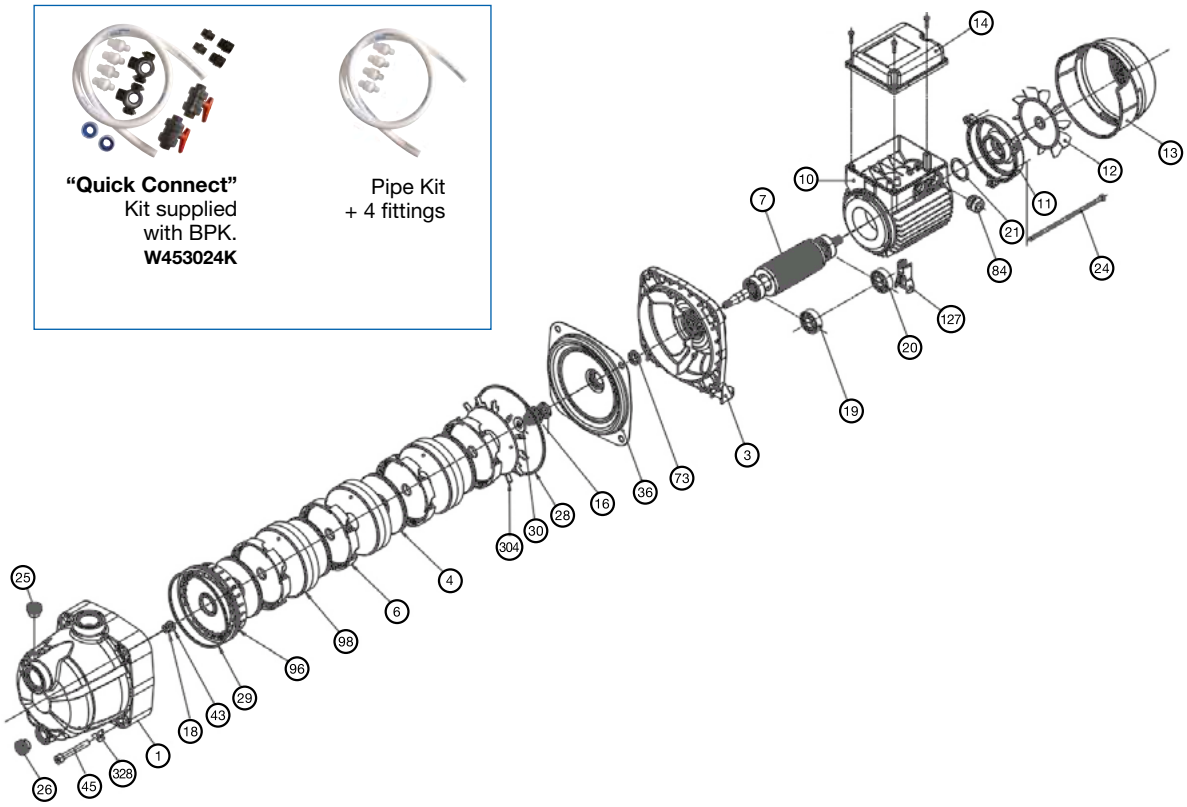

Position	Description	Reference Zodiac®	Reference Polaris®
1	body of the Pump	W4530217	148120620
3	Closing Pump	W4530224	161430090
4	Turbine	W4530219	150761091
6	Diffuser	W4530226	162860480
7	Rotor	W4530212	145002750
11	Motor Lid	W4530227	164030020
12	Ventilator	W4530220	160760240
13	Back Protection	W4530229	164260100
14	cover Electrical Terminals	W4530228	164060410
16	Complete Mechanical Cup and Spring	W4530218	148620500
18	O'Ring, Blockade	W4530205	2520633
19	Bearing Shaft	W4530203	2310003
20	Bearing Motor Shaft	W4530202	2310002
21	Metallic Disc	W4530207	2570001
	Condenser	W4530208	2710005
25	Starting Plug	W4530214	147120340
26	Starting Plug	W4530214	147120340
28	O'Ring	W4530201	2220377
29	O'Ring, body of the pump	W4530215	2220365
30	Wedge	W4530231	168300150
36	Watertightness cover	W4530221	161000330
43	O'Ring, Metal Disc Blockade	W4530206	2523059
45	Screw, body of the pump	W4530204	2420712
73	O'Ring	W4530255	2210558
84	Mechanical Seal	W4530233	168560310
96	Forward Suction body	W4530211	142860140
98	Diffuser's body	W4530223	161360480
127	Pump Stand with Feet	W4530225	161560190
304	Back Deflector	W4530222	161060560
	Electrical Terminals	W4530213	146860000
	Condenser's Slip	W4530234	168560330
328	Metallic Disc, body of the pump	W4530232	168300170
	Pipe Kit + 4 fittings	R0617100	R0617100

Z200 et PI20

Spare Parts

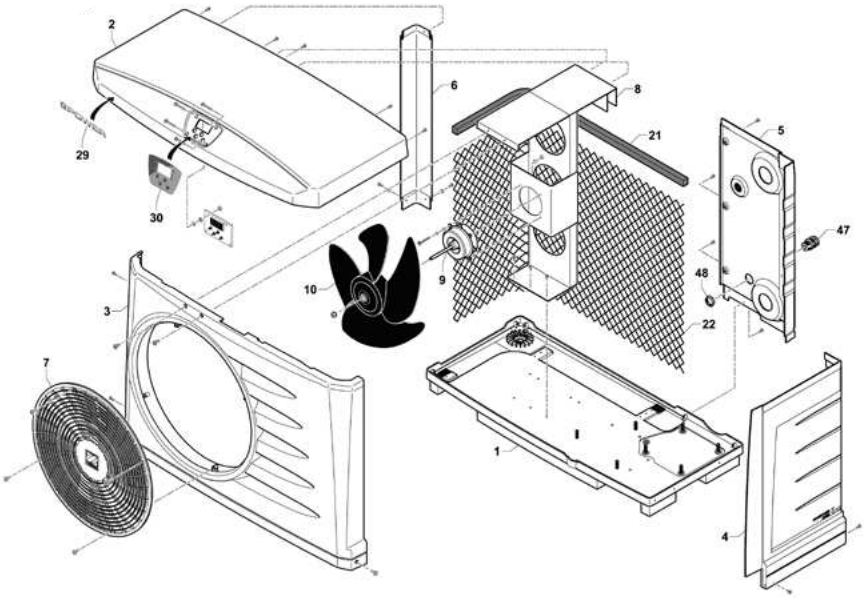

Position	Description	Reference Z200	Reference PI20 - Power
Electrical spare parts			
34	PCB Board non Easy Connect R410A version	R08105	
	PCB Board Easy Connect R410A version	R08109	WWA01069
	PCB Board R32 version	R08569	R08569
	PCB Board R32 defrost version	R08767	
35	User Interface and lexan non Easy Connect version	R07238	R07237
	User Interface and lexan non Easy Connect version		R07239
36	Link cable (PCB - User interface)	WWA01043	
38	Water Temperature sensor	WWA01045	
39	Air Temperature sensor	WWA01046	
40	Defrost Temperature sensor	WWA01047	
37	Water flow switch	V0088000A	
9	Motor fan 5, 7 and 9 KW	WWA01009	
	Motor fan 11 KW	WWA01066	
41	Compressor Capacitor Mitsubishi 5 KW 30µF	WWA01048	
	Compressor Capacitor Toshiba 5 KW 35µF	B0049500A	
	Compressor Capacitor Mitsubishi 7 KW 40µF	WWA01049	
	Compressor Capacitor Toshiba 7 KW 45µF	B0049700A	
	Compressor Capacitor Toshiba 9 KW 50µF	WWA01050	
	Compressor Capacitor Panasonic 9 KW 60µF	B0049900A	
	Compressor Capacitor 11 KW 55µF	WWA01068	
42	Fan Capacitor 5, 7 and 9 KW 2µF	WWA01051	
	Fan Capacitor 11 KW 4µF	WWA01071	
44	Electrical plate complete (without Capacitor)	WWA01052	
	Electrical plate complete new capacitor (since 2014)	B0048800A	
43	Electric cable	WWA01055	
51	Heating priority relay	B0049400A	
52	Board for remote control	B0049100A	
46	230/10,5V transformer	R06707	
-	Electric terminal strip + protection	WWA01097	
	Easy connect wires kit	R06916	
Refrigerating spare parts			
11	Compressor Mitsubishi 5 KW R410A	WWA01011	
	Compressor Toshiba 5 KW R410A	V0088800A	
	Compressor 5 kW R32	R0850300	
	Compressor Mitsubishi 7 KW R410A	WWA01012	
	Compressor Toshiba 7 KW R410A	V0089200A	
	Compressor 7 kW R32	R0850900	
	Compressor Toshiba 9 KW R410A	WWA01013	
	Compressor Panasonic 9 KW R410A	V0089700A	
	Compressor 9 kW R32	R0851000	
	Compressor Toshiba 11 KW R410A	WWA01067	
	Compressor 11 kW R32	R0851100	
20	Evaporator 5 KW	WWA01023	
	Evaporator 7 KW	WWA01024	
	Evaporator 9 and 11 KW	WWA01025	

*All electric parts on single phased Heat Pumps are sold without condensers.

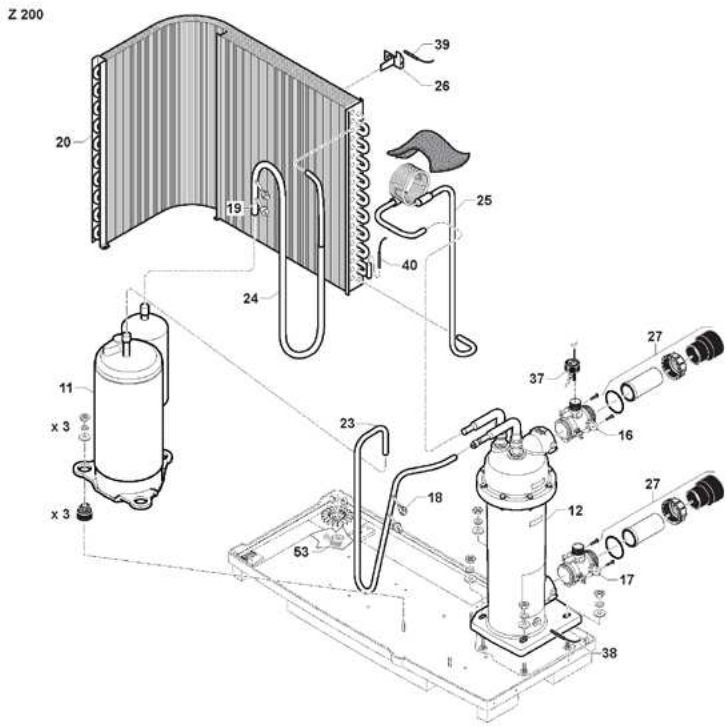

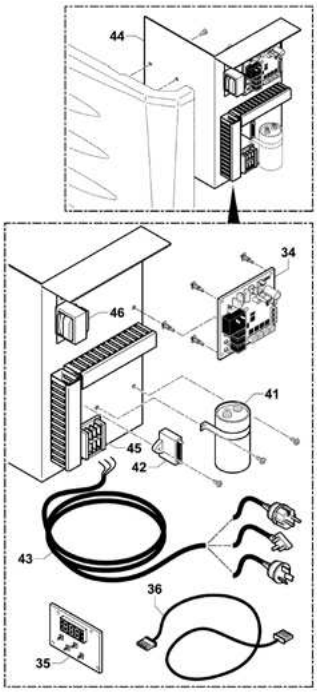

Position	Description	Reference Z200	Reference PI20 - Power
12	Condenser 5 KW (before 2014)	WWA01072	
	Condenser 5 KW	V0089800A	
	Condenser 7 KW	V0089900A	
	Condenser 9 KW (before 2014)	WWA01074	
	Condenser 9 KW	V0090000A	
	Condenser 11 KW (before 2014)	WWA01075	
	Condenser 11 KW	V0090100A	
	Condenser tank	R08015	
18	Pressure switch HP (to be welded)	WWA01021	
19	Pressure switch LP (to be welded)	WWA01022	
-	4 way valve Z200 defrost MD2 MD3 PI2021D PI2031D R32	R08768	
	4 way valve Z200 defrost MD4 MD5 PI2041D PI2051D R32	R08769	
	4 way valve coil Z200 defrost PI20D R32	R08770	
	ONE WAY VALVE Z200D PI20D DEFROST R32	R08771	
Others			
-	Compressor acoustic cover Toshiba 9 and 11kW R410A	WWA01080	
	Compressor acoustic cover Toshiba 5 KW R410A	T0041700A	
	Compressor acoustic cover Toshiba 7 KW R410A	T0041800A	
	Compressor acoustic cover Panasonic 9 KW R410A	T0041600A	
	Compressor acoustic cover 5 KW R32	R0855300	
	Compressor acoustic cover 7 KW R32	R0855400	
	Compressor acoustic cover 9 KW R32	R0855500	
	Compressor acoustic cover 11 KW R32	R0855600	
30	Lexan	H0442000B	
	Protective cap	R08070	
27	PC union	WWA01083	
16	Condenser outlet water connection with tapping	WWA01019	
	Condenser outlet water connection with tapping (since 2014)	A0260300A	
17	Condenser inlet water connection	WWA01020	
	Condenser inlet water connection (since 2014)	A0260200A	
26	Temperature sensor bracket	WWA01037	
10	Fan	WWA01010	
29	Sticker	H0442100A	WWA01039
53	Condensate water device	A0260100A	
Casing			
1	Base	WWA01001	
2	Cover	A0259500A	WWA01002
3	Front panel	A0259600A	WWA01003
4	Technical Door	A0259700A	WWA01004
5	Rear panel	A0259800A	WWA01005
6	Angle	A0259900A	WWA01006
7	Grid	A0260000A	WWA01087
8	Fan Support	WWA01008	
22	Evaporator protection	WWA01027	
-	Wintering cap	WPC02908	
Accessories			
-	Winter cover	R07094	
	Cleaning Kit HP	WMA03491	
	Remote control	WH000200	WH000200

Z300, PM30 et POWER FIRST Premium

Spare Parts

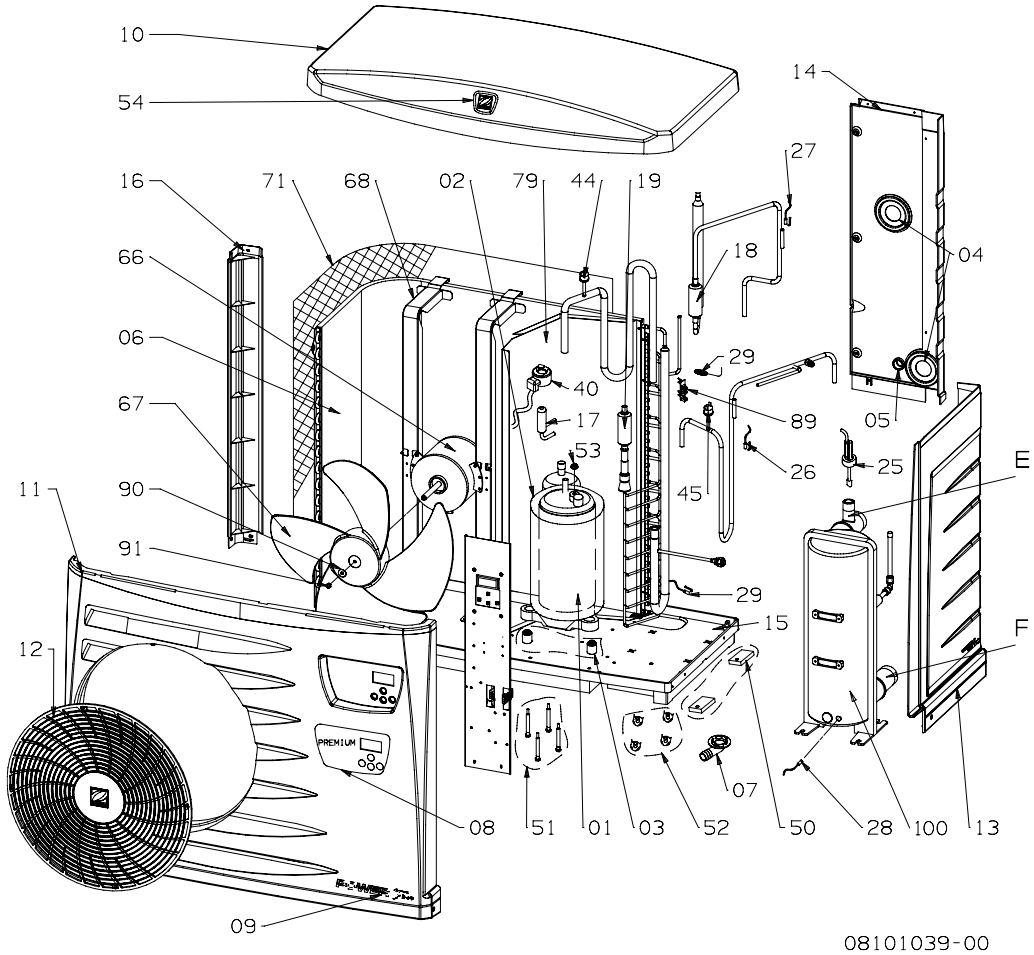

Position	Description	Reference Z300	Reference PM30	Reference PF Premium
Electrical spare parts				
25	Flow rate switch	WTC03943		
26	Temperature sensor ST5	R06740		
27	Temperature sensor ST4			
28	Temperature sensor ST1			
29	Temperature sensor ST2/ST3			
30	Set Electrical PFPREM 6	WTC03929		
	Set Electrical PFPREM 8, PM3041 and Z300 M4	WTC03930		
	Set Electrical PFPREM 11M, PM3051 and Z300 M5	WTC03931		
	Set Electrical PFPREM 11T, PM3053 and Z300 T5	WTC03932		
	Set Electrical PFPREM 13M, PM3061 and Z300 M7	WTC03992		
31	Capacitor 5 µF for fan	WTC03936		
33	Contactor 25 A, 230 V 50/60 Hz PFPREM 11 M, 13 M	WCF01113		
	Contactor 18 A, PM/PREM 6,8,11T,11TD,15TD	WTC03937		
34	Varistor (S20K275)	WTC03988		
35	Alu Capacitor 45µF PFPREM 6	B0181600A		
	Alu Capacitor 50µF PFPREM 8, PM3041 and Z300 M4	B0181100A		
	Alu Capacitor 55µF PFPREM 11, PM3051/53 and Z300 M5	B0181700A		
	Alu Capacitor 60µF PFPREM 13M, PM3061 and Z300 M7	B0181800A		
38	Phase controller (PREM 3 phase)	WTC03940		
40	Expansion valve Coil SAG UKV A053 for PREM	WTC03941		
46	Main card A1 + expansion valve card A4 set	R07151		
	Main card A1	WTC03944		
	Expansion valve card A4	R06931		
47	Display card A2	WTC03939D		
66	Ventilator motor	WTC03783		
	Filter 25A C3	WTC04000		

*All electric parts on single phased Heat Pumps are sold without condensers.

Z 300 M4, M5, T5

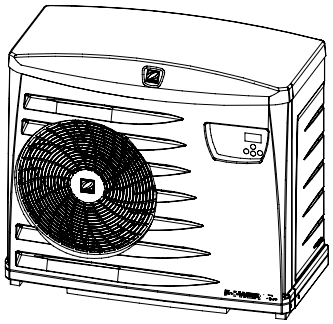

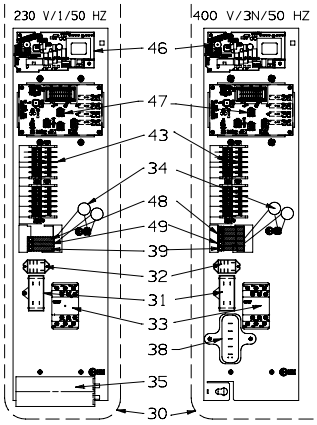

Position	Description	Reference Z300	Reference PM30	Reference PF Premium
Refrigerating spare parts				
1	Compressor PFPREM 6	WTC03920		
	Compressor PFPREM 8, PM3041 and Z300 M4	WTC03921		
	Compressor PFPREM 8, PM3041 and Z300 M4	WTC03922		
	Compressor PFPREM 11TD, PM3056 and Z300 T5	WTC03923		
	Compressor PFPREM 13M, PM3061 and Z300 M7	WTC03987		
-	Compressor suction tube PFPREM 11/13, PM3051/53/61 and Z300 M5/T5/M7	WDE01080		
6	Evaporator PFPREM 6, 8, PM3041 and Z300 M4	WTC03985		
	Evaporator PFPREM 11/13, PM3051/53/61 and Z300 M5/T5/M7	WTC03986		
17	Expansion valve UKV MD4 for PFPREM 6/8, PM3041 and Z300 M4	WTC03927		
	Expansion valve UKV for PFPREM 11, PM3051/53 and Z300 M5/T5	WTC03928		
	Expansion valve UKV 30D33 for PFPREM 15 MD/TD, PM3072/76 and Z300 MD8/TD8	WTC03994		
44	LP Bar pressure switch	WTC03815		
45	HP Bar pressure switch	WTC03816		
100	Condenser 6KW PFPREM 6	R06960		
	Condenser 7,5KW PFPREM 8, PM3041 and Z300 M4	R06961		
	Condenser 9,5KW PFPREM 11, PM3051/53 and Z300 M5/T5	R06963		
	Condenser 13kW PFPREM 13M, PM3061 and Z300 M7	R06954		
Casing				
10	Cover	A0260500A	WPV01001	
11	Front panel	A0260400A	WPV01003	
12	Grate	A0260900A	WPV01006	
13	Technical door	A0260700A	WPV01007	
14	Rear panel	A0260800A	WPV01004	
15	Base	WPV01002		
16	Upright	A0260600A	WPV01005	
Others				
2	Compressor insulation PFPREM 6, 8, PM3041 and Z300 M4	WTC03925		
	Compressor insulation PFPREM 11/13, PM3051/53/61 and Z300 M5/T5/M7	WTC03926		
7	Condensate drain	WTC02971		
8	Lexan	H0445800A	H0512300A	WTC03942
67	Ventilator fan	WTC03784		
68	Fan motor bracket	WTC03895		
-	Condenser support bracket set	R06415		
71	Protective grate 1045 x 765	WTC03896		
E	Condenser outlet connector with tapping+gasket (before 2016)	R0611001		
-	Condenser outlet connector 3 fixations with tapping+gasket	A0358000A		
F	Condenser inlet connector with tapping+gasket (before 2016)	R0611301		
-	Condenser inlet connector 3 fixations without tapping+gasket	A0357800A		
	Set of 2 half-union connectors + gaskets 40/49	W20RDU		
50	Anti vibration pegs (to order by 4)	WAP03064		
Accessories				
	Condensate tray + elbow	R07242		
	Remote control module	WTC04004		
	Local facility kit	W20KITPFPREMLT		
	Winter cover	R07095		
	Cleaning Kit NET	WMA03491		

Z300, PM30 et POWER FIRST Premium

Spare Parts

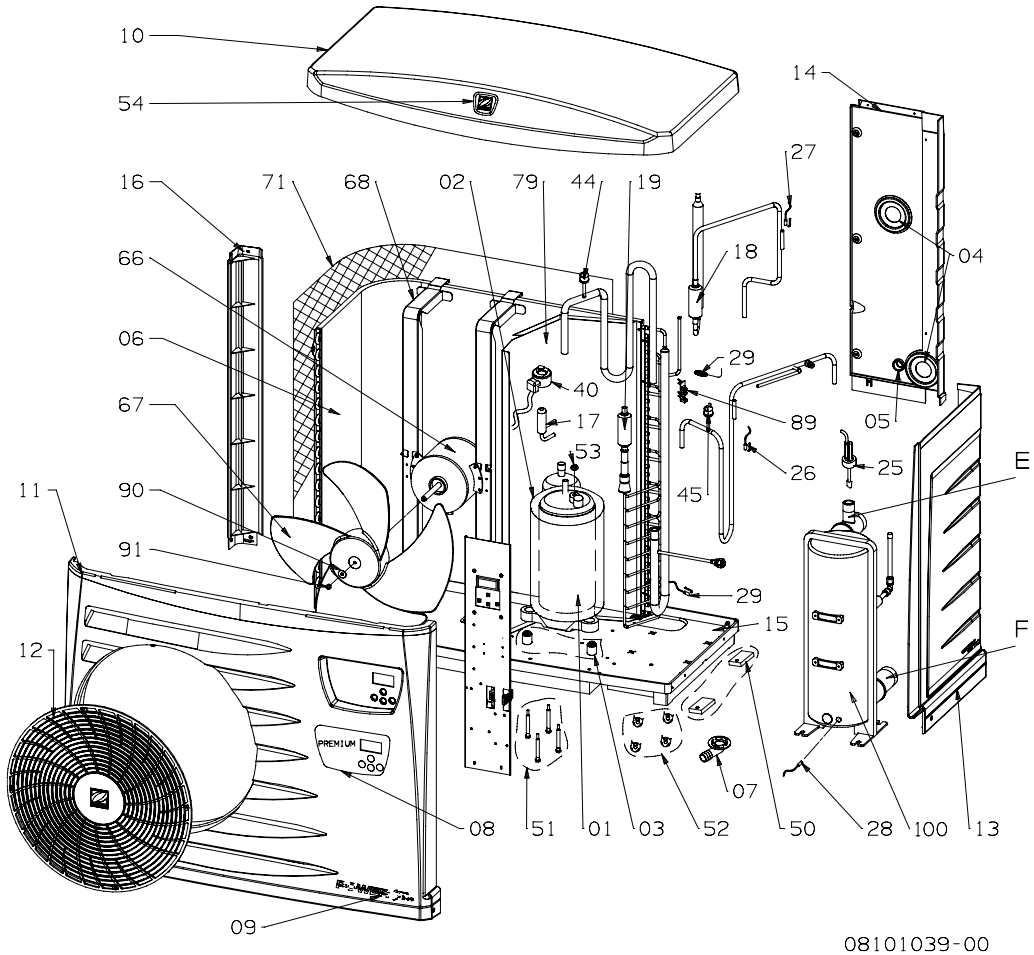

Repère	Désignation	Z300	PM30	PF PREMIUM
Pièces détachées électriques				
25	Flow rate switch	WTC03943		
26	Temperature sensor ST5	R06740		
27	Temperature sensor ST4			
28	Temperature sensor ST1			
29	Temperature sensor ST2/ST3			
30	Set Electrical PFPREM11/15 TD, PM3056/76 and Z300 TD5/8	WTC03934		
	Set electrical PFPREM 11 MD, PM3052 and Z300 MD5	WTC03933		
	Set electrical PFPREM 15 MD, PM3072 and Z300 MD8	R07319		
31	Capacitor 5 µF for fan	WTC03936		
33	Contactor 25 A, 230 V, 50/60 Hz PFPREM 11 MD, PM3052 and Z300 MD5	WCF01113		
	Contactor 18 A, PM/PFPREM11/15 TD, PM3056/76 and Z300 TD5/8	WTC03937		
	Switch Kit PM3072, Z300 MD8	R07473		
34	Varistor (S20K275)	WTC03988		
35	Capacitor alu 55µF PFPREM 11MD, PM3052 and Z300 MD5	B0181700A		
	Capacitor alu 60 µF PFPREM 15MD, PM3072 and Z300 MD8	B0181800A		
38	Phase controller (PREM 3 PHASE)	WTC03940		
40	Expansion valve Coil SAG UKV A053	WTC03941		
41	4-way coil	WTC03836		
42	Condenser antifrost resistance 55W L500	WTC03991		
44	LP Bar pressure switch	WTC03815		
45	HP Bar pressure switch	WTC03816		
46	Main card A1 + expansion valve card A4 set	R07151		
	Main card A1	WTC03944		
	Expansion valve card A4	R06931		
47	Display card A2	WTC03939D		

Reversible Version

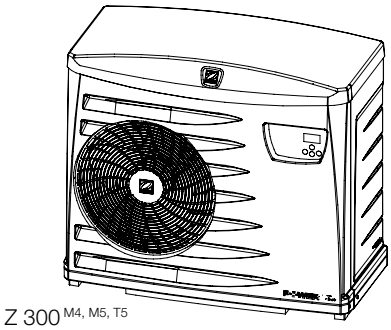

Z 300 M4, M5, T5

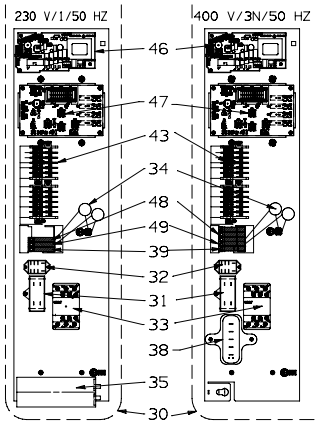

Repère	Désignation	Z300	PM30	PF PREMIUM
66	Ventilator motor	WTC03783		
	Starter booster	R07445		
	Filter 25A C3	WTC04000		
Pièces détachées frigorifiques				
100	Condenser 9,5KW PFPREM 11 MD/TD, PM3052/56 and Z300 MD5/TD5	R06963		
	Condenser 25KW PFPREM 15 MD/TD, PM3072/76 and Z300 MD8/TD8	R06957		
1	Compressor PFPREM 11MD, PM3052 and Z300 MD5	WTC03922		
	Compressor PFPREM 11TD, PM3056 and Z300 TD5	WTC03923		
	Compressor PFPREM 15MD, PM3072 and Z300 MD8	WTC03904		WTC03924
	Compressor C-SBP160H38A PFPREM 15TD, PM3076 and Z300 TD8	WTC03999		
-	Evaporator	WTC03986		
	Expansion valve UKV for PFPREM 11 MD/TD, PM3052/56 and Z300 MD5/TD5	WTC03928		
	Expansion valve UVK 30D33 for PFPREM 15 MD/TD, PM3072/76 and Z300 MD8/TD8	WTC03994		
	4-way valve	WTC03989		
Tôlerie				
10	Cover	A0260500A	WPV01001	
11	Front panel	A0260400A	WPV01003	
12	Grate	A0260900A	WPV01006	
13	Technical door	A0260700A	WPV01007	
14	Rear panel	A0260800A	WPV01004	
15	Base	WPV01002		
16	Upright	A0260600A	WPV01005	
Autres				
2	Compressor insulation PFPREM 11 MD/TD, PM3052/56 and Z300 MD5/TD5	WTC03926		
	Compressor insulation PFPREM 15 MD/TD, PM3072/76 and Z300 MD8/TD8	WTC03993		
7	Condensate drain	WTC02971		
8	Lexan	H0445800A	H0512300A	WTC03942
67	Propeller	WTC03784		
68	Fan motor bracket	WTC03895		
	Condenser support bracket set	R06415		
71	Protective grate 1045 x 765	WTC03896		
E	Condenser outlet connector with tapping+gasket (before 2016)	R0611001		
-	Condenser outlet connector 3 fixations with tapping+gasket	A0358000A		
F	Condenser inlet connector with tapping+gasket (before 2016)	R0611301		
-	Condenser inlet connector 3 fixations without tapping+gasket	A0357800A		
	Set of 2 half-union connectors + gaskets 40/49	W20RDU		
50	Anti vibration pegs (to order by 4)	WAP03064		
Accessoires				
-	Condensate tray + elbow	R07242		
	Remote control module	WTC04004		
	Local facility kit	W20KITPFPREMLT		
	Winter cover	R07095		
	Cleaning Kit HP	WMA03491		

*All electric parts on single phased Heat Pumps are sold without condensers.

Z400iQ

Spare Parts

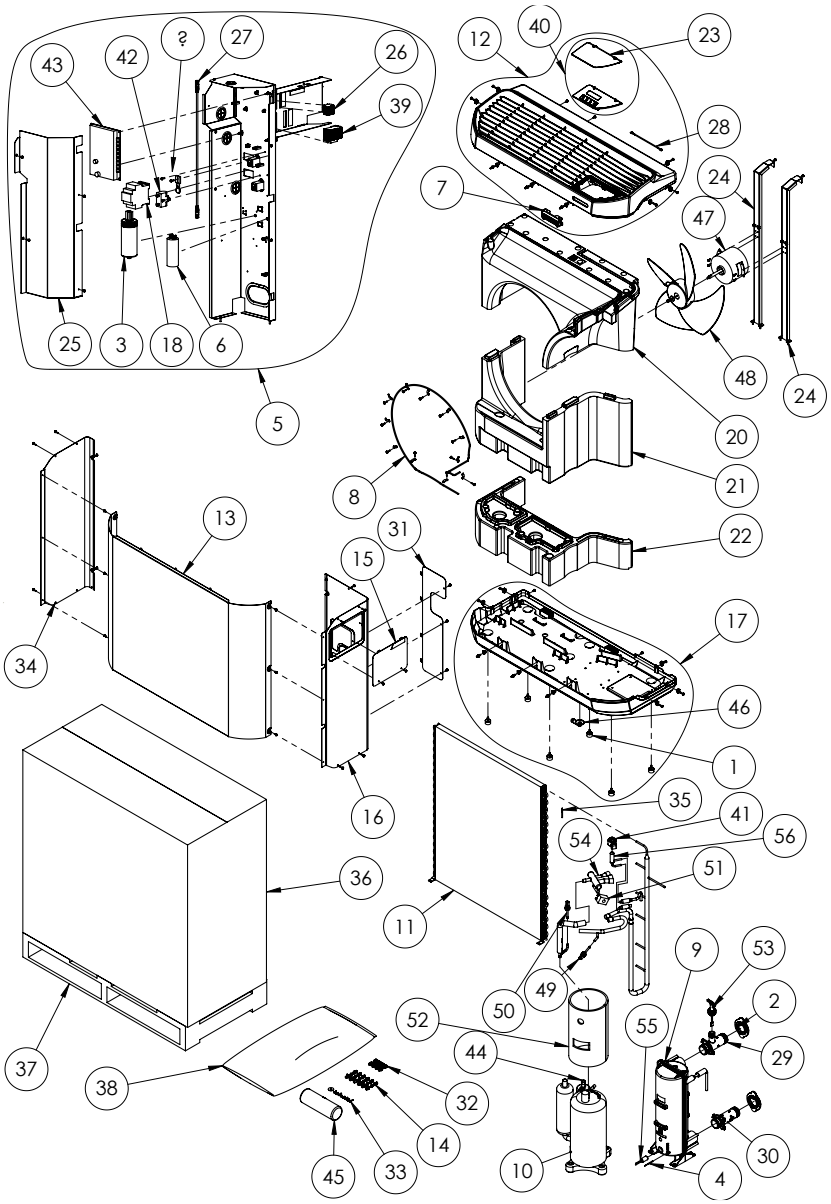

Position	Description	Reference
Electrical spare parts		
1	Anti-vibratile plots (Z400iQ)	A0261100A
3	Capacitor ALU 60µF	B0181800A
4	Temperature Sensor ST1, ST3, ST4, ST5	R06740
5	Electrical box Z400iQ MD4/MD5	R0811100
	Electrical box Z400iQ MD7	R0811200
	Electrical box Z400iQ MD8	R0811400
	Electrical box Z400iQ MD9	R0815000
	Electrical box Z400iQ TD7	R0811300
	Electrical box Z400iQ TD8	R0811500
	Electrical box Z400iQ TD9	R0815100
6	Fan capacitor Normal Speed Z400iQ	R0811600
7	Kit complete led Z400iQ	R0811900
8	KIT HEATING CABLE FIXTURE Z400iQ	R0812000
18	Contactor Z400iQ MD4/MD5/TD9 (18A)	WCF01113
	Contactor Z400iQ MD7 (25A)	R0815300
	Contactor Z400iQ MD8/MD9 (32A)	B0245900
	Contactor Z400iQ TD7/TD8 (12A)	R0815500
19	Varistor Z400iQ	R0815700
23	HMI Cover Z400iQ	R0817800
25	Electrical box door Z400iQ	R0818600
26	Terminal Block accessories Z400iQ	R0818700
27	Cable PCB Main Card / HMI Z400iQ	R0818800
28	Cable HMI / LED Z400iQ	R0818900
35	Temperature Sensor ST2	R0827600
39	Terminal block Z400iQ MD4/MD5/MD7/TD7	R0840800
	Terminal block Z400iQ MD8/TD8/MD9/TD9	R0840900
42	Fan capacitor Silence Speed Z400iQ	R0849900
43	Main Card A1 WIFI Z400iQ	R0854200
	Main Card A1 Z400 (before 2019 non iQ)	R0811700

Position	Description	Reference
47	Fan Motor	WTC03783
48	4 Blades propeller	WTC03784
53	Flow switch	WTC03943
55	Condenser antifrost resistance 55W	WTC03991
57	Smart Start Z400iQ	R0856600
Refrigerating spare parts		
2	HEAT EXCHANGER RING	A0353900A
3	PHASE CONTROLLER	WTC03940
9	Condenser Z400iQ MD4/MD5	R08121
	Condenser Z400iQ MD7/TD7	R08122
	Condenser Z400iQ MD8/TD8/MD9/TD9	R08123
10	Compressor Z400iQ MD4	R0812400
	Compressor Z400iQ MD5	R0812500
	Compressor Z400iQ MD7	R0812600
	Compressor Z400iQ MD8	R0812800
	Compressor Z400iQ MD9	R0813000
	Compressor Z400iQ TD7	R0812700
	Compressor Z400iQ TD8	R0812900
	Compressor Z400iQ TD9	R0813100
11	Evaporator Z400iQ MD4/MD5	R0813200
	Evaporator Z400iQ MD7/TD7	R0813300
	Evaporator Z400iQ MD8/TD8/MD9/TD9	R0813400
20	Air conveyor top Z400iQ MD4/MD5/MD7/TD7	R0817200
	Air conveyor top Z400iQ MD8/TD8/MD9/TD9	R0817500
21	Air conveyor bottom Z400iQ MD4/MD5/MD7/TD7	R0817300
	Air conveyor bottom Z400iQ MD8/TD8/MD9/TD9	R0817600
22	Air conveyor bottom wedge Z400iQ MD7/TD7	R0817400
41	Expansion valve bobin ukv a053 Z400iQ	R0848600
44	Liquid separator Z400iQ MD4/MD5/MD7/TD7	R0855100
	Liquid separator Z400iQ MD8/TD8/MD9/TD9	R0855200
46	Condensate evacuation elbow	WTC02971
49	Lp switch	WTC03815
50	Hp bar pressure switch	WTC03816
51	4 way valve coil	WTC03836
54	4 way valve Z400iQ MD4/MD5/MD7/TD7	WTC03989
	4 way valve Z400iQ Z400iQ MD8/TD8/MD9/TD9	R0815800
56	Expansion valve ukv Z400iQ MD4	WTC03927
	Expansion valve ukv Z400iQ MD5	WTC03928
	Expansion valve ukv Z400iQ MD7/TD7/MD8/TD8/MD9/TD9	WTC03994
Casing		
N/A	Kit demo tole Z400iQ ag	R0840400
	Kit demo tole Z400iQ bg	R0840500
13	Front panel aluminium grey + fixture kit Z400iQ MD4/MD5	R0813700
	Front panel aluminium grey + fixture kit Z400iQ MD7/TD7	R0813900
	Front panel aluminium grey + fixture kit Z400iQ MD8/TD8/MD9/TD9	R0814100
	Front panel beige grey + fixture kit Z400iQ MD4/MD5	R0813800
	Front panel beige grey + fixture kit Z400iQ MD7/TD7	R0814000
	Front panel beige grey + fixture kit Z400iQ MD8/TD8/MD9/TD9	R0814200
	Front panel stainless steel + fixture kit Z400iQ MD4/MD5	R0861200
	Front panel stainless steel + fixture kit Z400iQ MD7/TD7	R0861300
	Front panel stainless steel + fixture kit Z400iQ MD8/TD8/MD9/TD9	R0861400
14	Kit fixture front panel (6x rubber/nut/screw) Z400iQ	R0814300
16	Technical panel Z400iQ MD4/MD5	R0814500
	Technical panel Z400iQ MD7/TD7	R0814600
	Technical panel Z400iQ MD8/TD8/MD9/TD9	R0814700
34	Lateral panel Z400iQ MD4/MD5	R0820000
	Lateral panel Z400iQ MD7/TD7	R0820100
	Lateral panel Z400iQ MD8/TD8/MD9/TD9	R0820200
40	Kit complete user interface wifi Z400iQ	R0841100
	Kit complete user interface Z400iQ (before 2019)	R0811800
Others		
12	Top with fixure kit Z400iQ MD4/MD5/MD7/TD7	R0813500
	Top with fixure kit Z400iQ MD8/TD8/MD9/TD9	R0813600
15	Lateral inspection hatch Z400iQ	R0814400
17	Base with fixture kit Z400iQ MD4/MD5/MD7/TD7	R0814800
	Base with fixture kit Z400iQ MD8/TD8/MD9/TD9	R0814900
24	Motor fan support Z400iQ MD4/MD5	R0818000
	Motor fan support Z400iQ MD7/TD7	R0818100
	Motor fan support Z400iQ MD8/TD8/MD9/TD9	R0841000
29	Water connector for flow switch Z400iQ	R0819000
30	Water connector without flow switch Z400iQ	R0819100
31	Backside inspection hatch Z400iQ	R0819200
32	Plastic nuts Z400iQ	R0819300
33	Kit screws entire unit Z400iQ	R0819600
36	Kit packaging Z400iQ MD4/MD5	R0827700
	Kit packaging Z400iQ MD7/TD7	R0827800
	Kit packaging Z400iQ MD8/TD8/MD9/TD9	R0827900
37	Pallet Z400iQ MD4/MD5/MD7/TD7	R0835900
	Pallet Z400iQ MD8/TD8/MD9/TD9	R0836000
45	Set of 2 half union connectors + gasket	W20RDU
52	Compressor insulation Z400iQ MD4	R0815900
	Compressor insulation Z400iQ MD5	R0816000
	Compressor insulation Z400iQ MD7	WTC03926
	Compressor insulation Z400iQ MD8/TD8/MD9	R0817000
	Compressor insulation Z400iQ TD7	R0816900
	Compressor insulationZ400iQ TD9	R0817100
Accessories		
38	Winter cover Z400iQ large	R0840000
	Winter cover Z400iQ medium	R0839900
	Winter cover Z400iQ small	R0839800
-	Cleaning kit hp	WMA03491

*All electric parts on single phased Heat Pumps are sold without condensers.

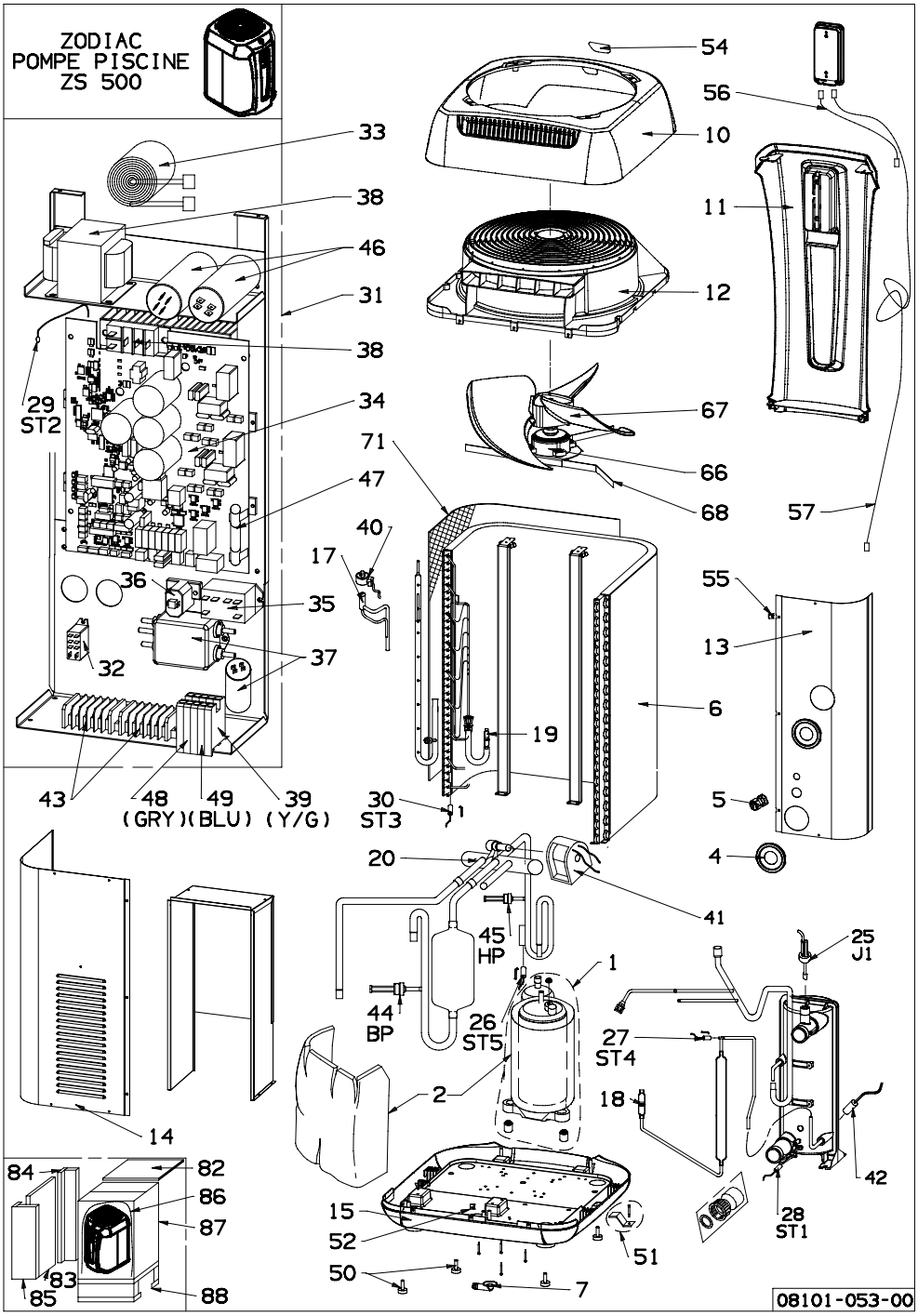

Position	Description	Reference
Electrical spare parts		
25	Flow switch	B0052400A
26 27 28 29 30	Temperature sensor	R06740
31	Complete electrical set without pad MD4	B0203200A
	Complete electrical set without pad MD5	B0052100A
	Complete electrical set without pad MD8	B0203300A
	Complete electrical set without pad TD5	B0224900A
	Complete electrical set without pad TD8	B0225000A
34	A1 Main electronic card set MD4	R07146
	A1 Main electronic card set MD5	R07147
	A1 Main electronic card set MD8	R07148
	A1 Main electronic card set TD5	B0217300B
	A1 Main electronic card set TD8	B0217400B

Position	Description	Reference
	4 way valve Filter	R08611
-	A1 Card fuse 6,3 x 32 25A	B0050600A
57	Communication wire RJ11/45 2M	B0051900A
37	EMC Filter 250-16A MD4-5	B0050900A
	Filter 25A C3 MD8	WTC04000
	EMC Filter TD5-8	B0217600A
32	Relay 12A 230V 2 changeover contacts (for heating priority)	B0050800A
	Relay ZS500 TD (for power)	B0217500A
33	Filter inductor 30KHZ 1,5mH 22A	B0050700A
-	Condenser 1500µF 400V	B0217700A
42	Condenser resistance 55W L750	B0051000A
-	Pad (Display)	WVH00001
	Lexan Pad ZS500	WZD00001
66	Motor fan	B0050300A
Refrigerating spare parts		
1	Compressor ZS500 MD4-5	B0050500A
	Compressor ZS500 MD8	B0185300A
	Compressor ZS500 TD5	V0145000A
	Compressor ZS500 TD8	V0145100A
6	Evaporator MD4	M0126100A
	EvaporatorMD5-8 TD5-8	M0042500A
17	Expansion valve UKV MD4	WTC03927
	Expansion valve UKV MD5-8 TD5-8	WTC03928
40	Expansion valve coil	B0217200A
20	4-way valve MD4-5 TD5	WTC03989
	4-way valve MD8 - TD8	V0144700A
41	4-way coil	WTC03836
44	Pressure switch BP (to be soldered)	B0051200A
45	Pressure switch HP (to be soldered)	B0051100A
	Condenser 13kW MD4-5 TD5	R06954
	Condenseur 25KW MD8/TD8	R06957
Casing		
10	Top panel	A0240800A
11	Front panel	A0240500A
12	Grate	A0240700A
13	Fixed rear panel	M0041200A
14	Removable rear panel	M0041300A
15	Base plate	A0240600A
Others		
2	Compressor sound insulation MD4-5 TD5	T0041900A
	Compressor sound insulation MD8 TD8	T0067500A
7	Condensate drain	WTC02971
50	Anti Vibratile plots	A0261100A
67	Propeller	WTC03955
68	Fan motor bracket MD4	M0132900A
	Fan motor bracket MD5-8 TD5-8	M0041400A
	Condenser support bracket set	R06415
71	Grey protective evaporator grate	A0261000A
	Condenser outlet connector with tapping+gasket (before 2016)	R0611001
	Condenser outlet connector 3 fixations with tapping+gasket	A0358000A
	Condenser inlet connector with tapping+gasket (before 2016)	R0611301
	Condenser inlet connector 3 fixations without tapping+gasket	A0357800A
	Set of 2 half-union connectors + gaskets 40/49	W20RDU
	Joint for 50 x 1' 1/2 union	WNS03428
Accessories		
	Condensate tray	R07240
	Remote control module	WH000201
	Local facility kit	WH000202
	Winter cover	R07096
	Cleaning Kit HP	WMA03491

*All electric parts on single phased Heat Pumps are sold without condensers.

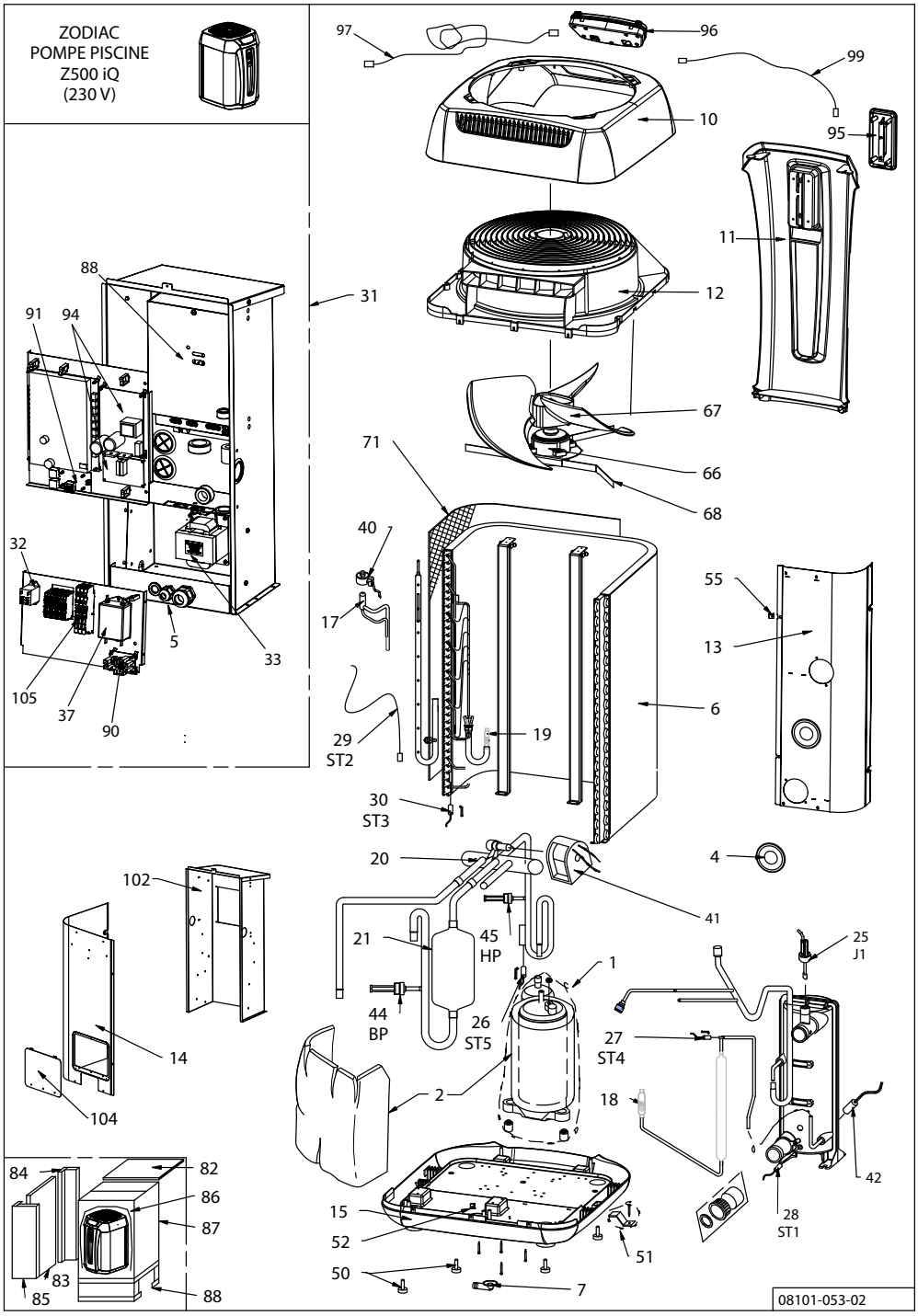

Position	Description	Reference
Electrical spare parts		
26, 27, 28, 30	Temperature sensor ST1, ST3, ST4, ST5	R0827600
29	Temperature sensor ST2	R06740
31	Complete electrical box Z500iQ MD8	R0879700
	Complete electrical box Z500iQ TD5	R0879800
	Complete electrical box Z500iQ TD8	R0879900
37	EMC filter Z500iQ	WTC03982
33	1 Phase Inductor Z500iQ	R0876300
	Tri Inductor Z500iQ	R0876400
105	Terminal block MD8 (power supply and options)	R0879400
106	Terminal block TD5, TD8 (power supply and options)	R0876200
88	Driver 1 phase MD4, MD5, MD8 (A2) Z500iQ	R0873100
89	Driver 3 phase TD5, TD8 (A2) Z500iQ	R0873200

Position	Description	Reference
90	Filter board (A7) Z500iQ	R0874300
91	Spliter board (A5) Z500iQ	R0874200
92	Siam filter Tris TD5, TD8 Z500iQ	R0873300
93	Regulation board (A1) MD4 Z500iQ	R0873400
93	Regulation board (A1) MD5 Z500iQ	R0873500
	Regulation board (A1) MD8 Z500iQ	R0873600
	Regulation board (A1) TD5 Z500iQ	R0873700
	Regulation board (A1) TD8 Z500iQ	R0873800
94	Fan board (A3 + A8) Z500iQ	WTC03963
95	LED board assembly (A6) Z500iQ	R0874000
96	HMI board assembly Z500iQ	R0875900
97	RJ45 COMMUNICATION WIRE ZS500 IQ IHM / spliter 165 cm	R0874400
99	LED WIRE 65 cm Z500iQ	R0874500
	Wire between spliter board and fan board Z500iQ	R0874600
	NN wires spliter / terminal block Z500iQ	R0874700
102	ELECTRICAL BOX Z500iQ THREE PHASE	R0878900
	Electrical box Z500iQ single phase	R0874800
25	Flow switch Z500	B0052400A
32	Relay 12A contacts inverseur	B0050800A
42	Condenser resistance 55W L750	B0051000A
66	Motor fan	B0050300A
Refrigerating spare parts		
	Condenser Z500iQ MD4; MD5; TD5	R0812200
	Condenser Z500iQ MD8; TD8	R0812300
	Z500iQ fittings with chipping	R0819000
	Z500iQ fittings without chipping	R0819100
1	Compressor Z500iQ MD4-5	B005050A
1	Compressor Z500iQ MD8	B0185300A
	Compressor Z500iQ TD5	V014500A
	Compressor Z500iQ TD8	V0141100A
6	Evaporator MD4 Z500iQ	M0126100A
6	Evaporator MD5,8 TD5,8 Z500iQ	M0042500A
17	Expansion valve UKV MD4 Z500iQ	WTC03927
17	Expansion valve UKV MD5,8 TD5,8 Z500iQ	WTC03928
40	Expansion valve coil Z500iQ	B0183700A
20	4 way valve MD4,5 TD5	WTC03989
20	4 way valve MD8 TD8	V0144700A
41	Bobine 4 way valve Z500iQ	WTC03990
44	Low pressure switch Z500iQ	B0051200A
45	High pressure switch Z500iQ	B0051100A
Casing		
10	Top panel Z500iQ	R0874900
11	Front panel Z500iQ	R0875000
12	Grid Z500iQ	R0875100
14	Removable rear panel Z500iQ	R0875200
104	Electrical terminal block plate Z500iQ	R0875300
15	Base plate Z500iQ	R0875400
13	Fixed rear panel Z500iQ	R0876000
2	Compressor insulation MD4,5 TD5 Z500iQ	T0041900A
2	Compressor insulation MD8 TD8 Z500iQ	T0067500A
7	Condensate drains Z500iQ	WTC02971
50	Anti vibration mounts Z500iQ	A0261100A
67	Propeller Z500iQ	WTC03955
68	Fan motor bracket MD4	M0132900A
68	Fan motor bracket MD5, 8 TD5, 8	M0041400A
	Condenser bracket set Z500iQ	R06415
71	Grey protective evaporator grid	A0261000A
Accessories		
	Condensate tray	R07240
	Local facility kit	WH000202
	Winter cover	R07096
	Cleaning kit PAC	WMA03491

Powerforce

Spare Parts

Power Force 25-35

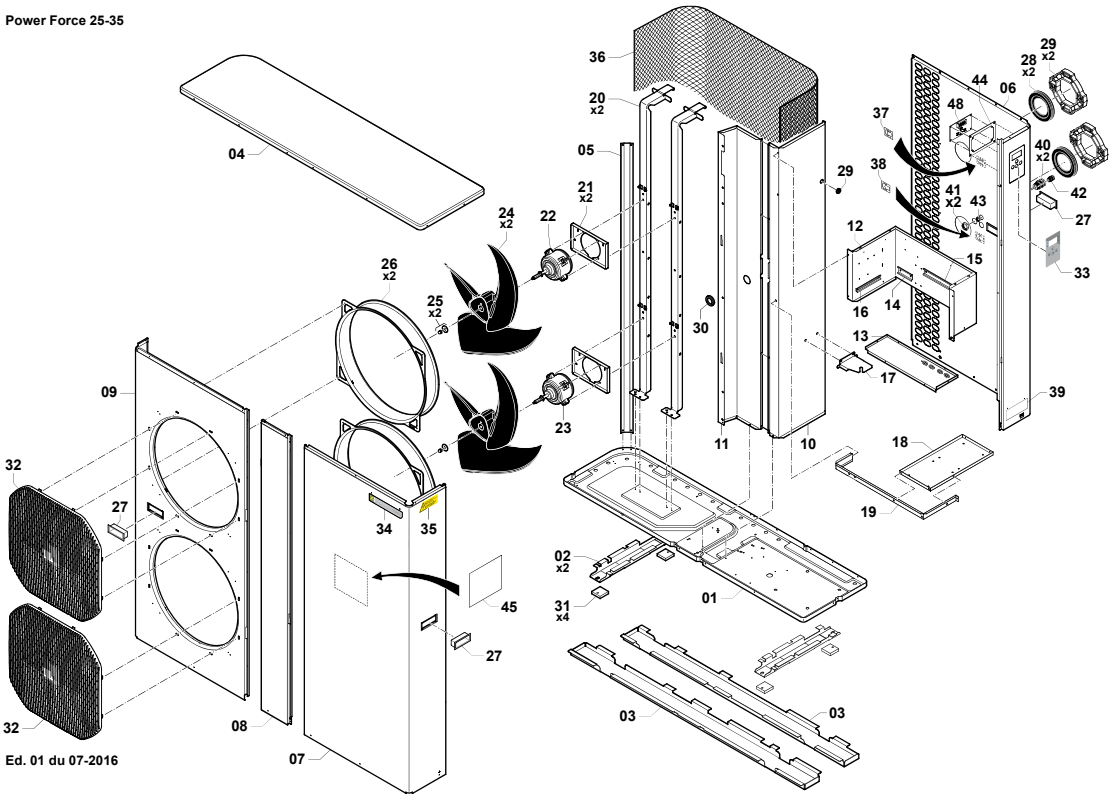

Ed. 01 du 07-2016

Power Force 25-35

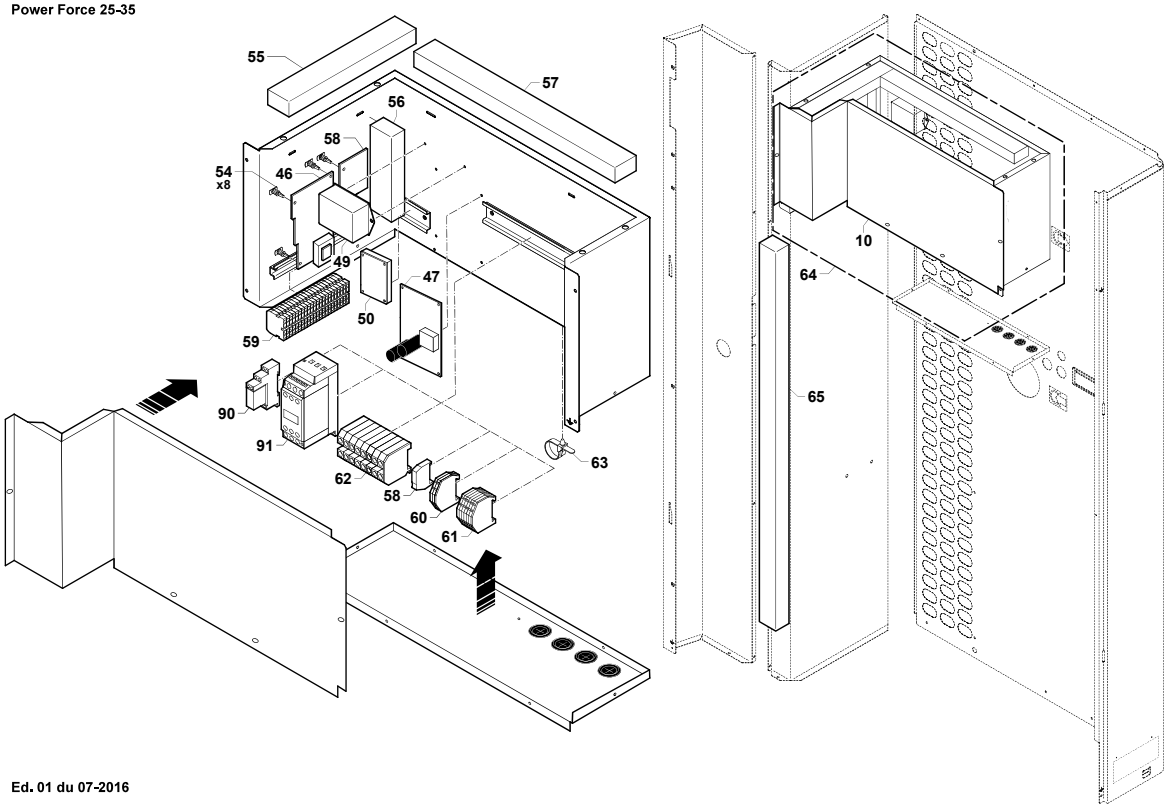

Ed. 01 du 07-2016

Position	Description	Reference
Electrical spare parts		
22	Bottom or Top fan motor (both must be replaced)	WTC03954
48	Display card A2	WTC03939D
46	Adjustment main card A1	WTC03962
58	Expansion valve card A4	R07043
47	Fan card A3 + protective circuit	WTC03963

Position	Description	Reference
50	Housing resistance 45W Compressor	WTC03964
	Protection circuit	WTC03974
52	Fuse terminal assembly 5 x 20 2 A	WTC04002
91	Contactor 25A	WCF01113
90	Phase controller	WTC03940
83	Temperature sensor	R06740
87	Temperature sensor	
88	Temperature sensor	
84 85	Temperature sensor	
49	Filter CEM 6 A, 250 V	WTC03982
	Varistor	WTC03988
	Klixon Compressor	WTC04009
	Compressor starter kit for Powerforce before 2016	WTC03977
Refrigerating spare parts		
66b	Compressor PowerForce 35	WTC03945
66a	Compressor PowerForce 25	WTC03946
69	Condenser PowerForce 25 and 35	R06959
70	Evaporator	WTC03947
75	4-way valve	WTC03948
73	Expansion valve UKV32D	WTC03949
72	Dehydrator 164 S	WTC03950
71	Liquid bottle	WTC03951
74	Expansion valve Coil UKV-A102 LG700	WTC03959
76	4-way coil STEF-01AI518A1	WTC03960
	LP 0.5/2 Bar pressure switch (to be soldered)	WTC03815
	HP 33/42 Bar pressure switch (to be soldered)	WTC03816
Casing		
9	Double ventilation assembly	WTC03965
8	Front panel assembly with display location (up to 2015)	WTC03966
	front panel (from nov.2015)	M0143900A
7	Side panel	WTC03968
6	Rear panel (up to 2015)	WTC03969
	Rear panel with display location (from nov. 2015)	M0144000A
4	Top panel assembly	WTC03970
5	Left rear upright	WTC03971
1/2/3	Base	WTC03973
Others		
101	Condensate manifold PowerForce	W20COLPAC2535EN
102	Condensate manifold PowerForce	W20COLPAC2535SO
103	Joint for 50 x 1' 1/2 union	WNS03428
68	Compressor insulation	WTC03952
24	Propeller	WTC03955
32	Fan protection grate	WTC03956
36	Grill 1350x1490 mm	WTC03957
26	Plastic ferrule	WTC03958
33	Lexan	WTC03967
27	Plastic handle + seal	WTC03972
21	Ventilation support upright	WTC03976
	Card seal A2	WTC04008
	Condenser connection bracket	R06627
103-104-105	3 pieces connection kit diam. 63	WNS01791
	Condenser outlet connector with tapping+gasket (before 2016)	R0611001
	Condenser outlet connector 3 fixations with tapping+gasket	A0358000A
	Condenser inlet connector with tapping+gasket (before 2016)	R0611301
	Condenser inlet connector 3 fixations without tapping+gasket	A0357800A
Accessories		
	Remote control module	WTC04004
	Cleaning Kit HP	WMA03491
	Condensate tray	R07241

*All electric parts on single phased Heat Pumps are sold without condensers.

Z900

Spare Parts

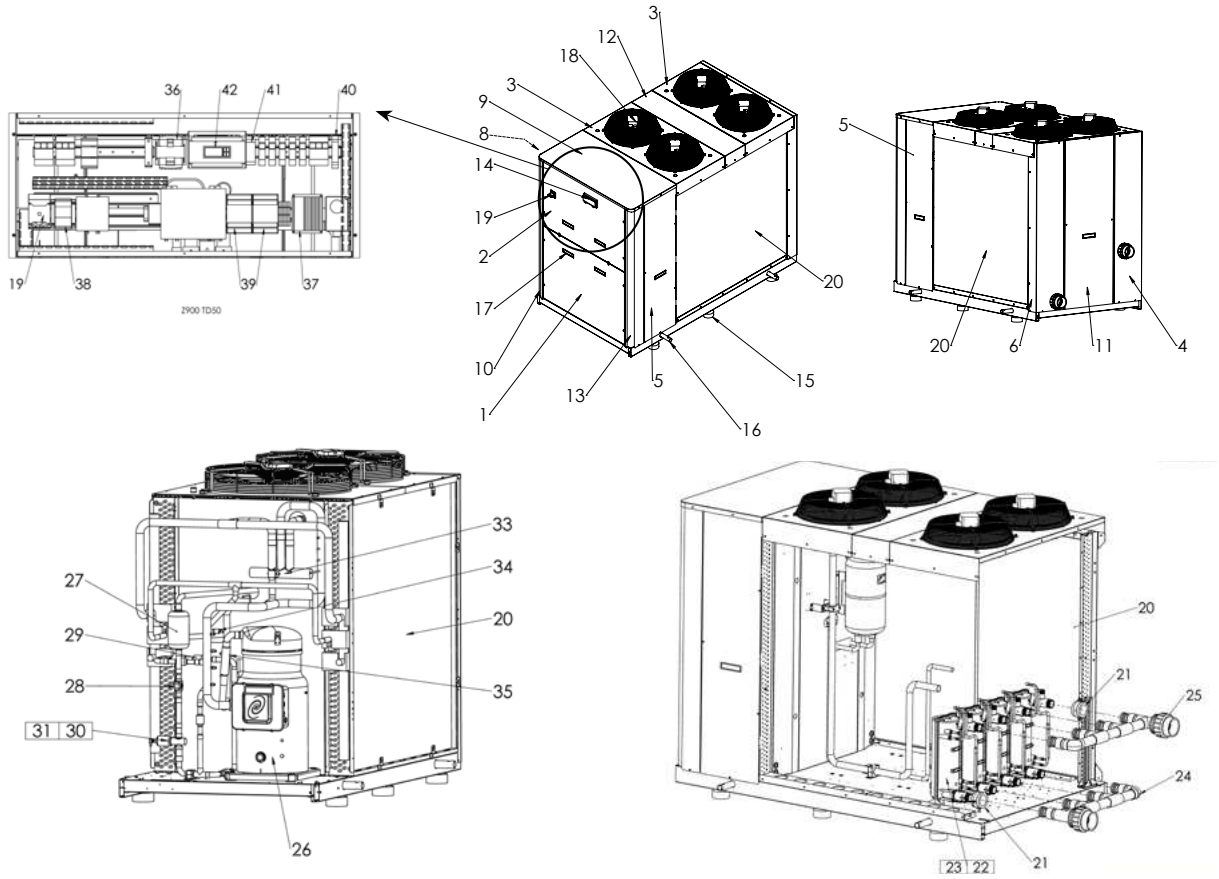

Position	Description	Reference
	Electrical spare parts	
18	Motorfan Z900 TD20-30	R07784
	Motorfan Z900 TD50	R07785
	Noryl flow switch	WSK02022
42	Regulation and display Z900 TD20	R07795
	Regulation and display Z900 TD30	R07796
	Regulation and display Z900 TD50	R07797
39	EEV driver Z900 TD20	R07792
	EEV connectors Z900 TD20	R07801
	EEV connectors Z900 TD30-50	R07802
37	Motorfan driver Z900 TD20-30	R07812
	Motorfan driver Z900 TD50	R07813
38	Compressor contactor Z900 TD20	R07787
	Compressor contactor Z900 TD30	R07788
	Compressor contactor Z900 TD50	R07789
	Temperature sensors (air and water)	R07803
	Suction temperature sensor (EEV aspiration)	R07800
40	Phase controler	R07786
41	Bipolar relay Z900 TD20-30	R07808
	Bipolar relay Z900 TD50	R07809
	Connection wire for pressure sensor	R07817
	Condenser antifreeze heater	R07799
	Compressor heater Z900 TD20	R07814
	Compressor heater Z900 TD30	R07815
	Compressor heater Z900 TD50	R07816
33	4 way-valve electrical coil	R07804
	4 way-valve Z900 TD20-30	R08017
	4 way-valve Z900 TD50	R08018
36	Transformer 24V Z900	R07798
19	Main ON/OFF switch Z900 TD20-30	R07806
	Main ON/OFF switch Z900 TD50	R07807

*All electric parts on single phased Heat Pumps are sold without condensers.

Position	Description	Reference
Refrigerating spare parts		
26	Compressor Z900 TD20	R07827
	Compressor Z900 TD30	R07828
	Compressor Z900 TD50	R07829
30	EEV Z900 TD20	R07830
	EEV Z900 TD30-50	R07831
20	Evaporator Z900 TD20	R07839
	Evaporator Z900 TD30	R07840
	Evaporator Z900 TD50	R07841
27	Dehydrator Z900 TD20	R07835
	Dehydrator Z900 TD30-50	R07836
28	Liquid check Z900 TD20	R07837
	Liquid check Z900 TD30-50	R07838
29	Check valve Z900 TD20	R07833
	Check valve Z900 TD30-50	R07834
35	Discharge line anti vibration tube Z900 TD20	R07842
	Discharge line anti vibration tube Z900 TD30	R07843
	Discharge line anti vibration tube Z900 TD30	R07844
	Pressure sensor BP Z900	R07790
	Pressure sensor HP Z900	R07791
34	HP security sensor Z900 TD30-50 (manual reset)	R07832
	Low pressure switchZ900	R07845
22	Condenser 25KW	R06957
24	Water inlet PVC collector Z900 TD20	R07818
	Water inlet PVC collector Z900 TD30	R07820
	Water inlet PVC collector Z900 TD50	R07822
25	Water outlet PVC collector Z900 TD20	R07819
	Water outlet PVC collector Z900 TD30	R07821
	Water outlet PVC collector Z900 TD50	R07823
21	Collector mountig bracket kit Z900 TD20-30	R07777
Casing		
1	Technical access panel Z900 TD20-30	R07750
	Technical access panel Z900 TD50	R07760
2	Display metal panel Z900 TD20-30	R07751
	Display metal panel Z900 TD50	R07761
3	Upper fan metal panel Z900 TD20-30	R07752
	Upper fan metal panel Z900 TD50	R07762
9	Upper front metal panel Z900 TD20-30	R07758
	Upper front metal panel Z900 TD50	R07772
4	Right rear metal panel Z900 TD20-30	R07753
	Right rear metal panel Z900 TD50	R07766
6	Left rear metal panel Z900 TD20-30	R07755
	Left rear metal panel Z900 TD50	R07763
7	Wtare connection rear metal panel Z900 TD20-30	R07756
11	Central rear metal panel Z900 TD50	R07764
12	Mid upper metal panel Z900 TD50	R07767
8	Left metal panel Z900 TD20-30	R07757
	Left metal panelZ900 TD50	R07769
5	Right metal panel Z900 TD20-30	R07754
	Right metal panel Z900 TD50	R07768
10	Front left corner Z900 TD20-30	R07759
13	Front right corner Z900 TD50	R07770
10	Front left corner Z900 TD50	R07771
Others		
14	User interface plastic window Z900	R07773
17	Casing handles	R07846
15	Anti-vibration mountings Z900	R07774
	Compressor sound insulation TD20	R07781
	Compressor sound insulation TD30	R07782
	Compressor sound insulation TD50	R07783
	3 pieces connection kit diam. 63 (Z900 TD20/30)	WIP03451
	3 pieces connection kit diam. 90 (Z900 TD50)	WIP03450
Accessories		
	Remote control	R0770900
	Cleaning Kit HP	WMA03491
16	Lifting bars Z900 TD20	R07778
	Lifting bars Z900 TD30	R07779
	Lifting bars Z900 TD50	R07780

Power First 6, 8, 11, 13 et 15

Spare Parts

Power First 6, 8, 11, 13, 15

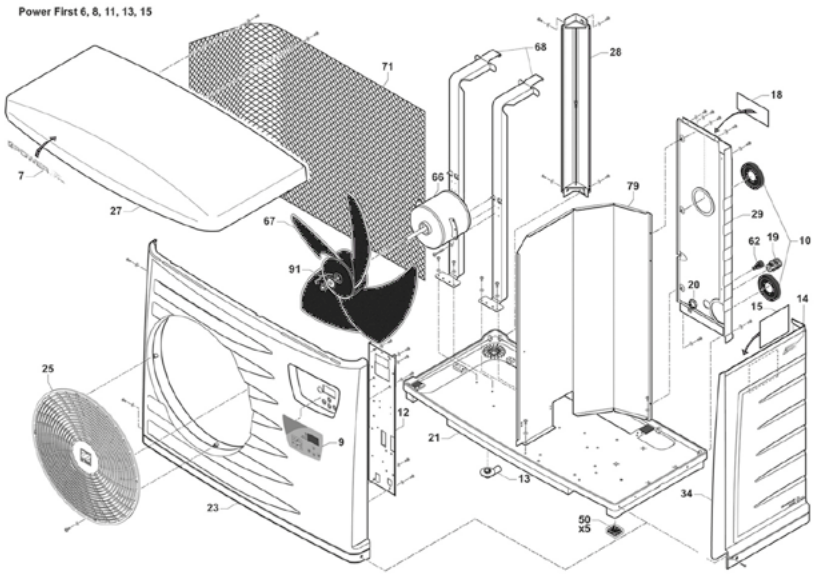

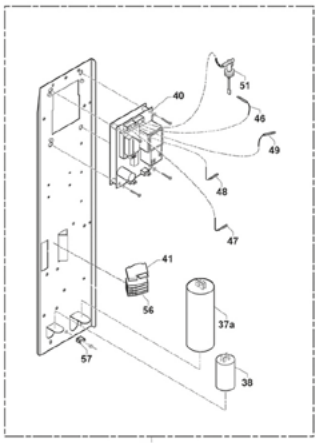

36a

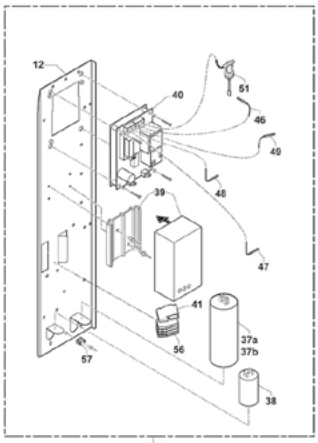

36b
36c

Power First 6, 8, 11

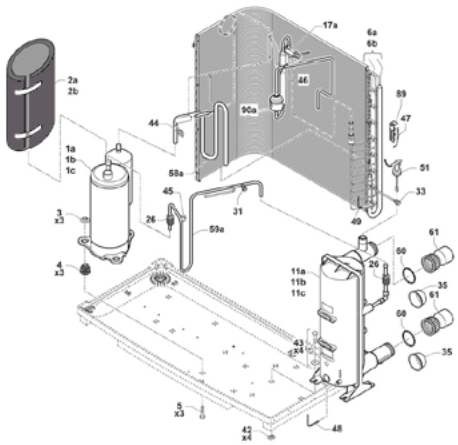

Power First 13

Power First 13

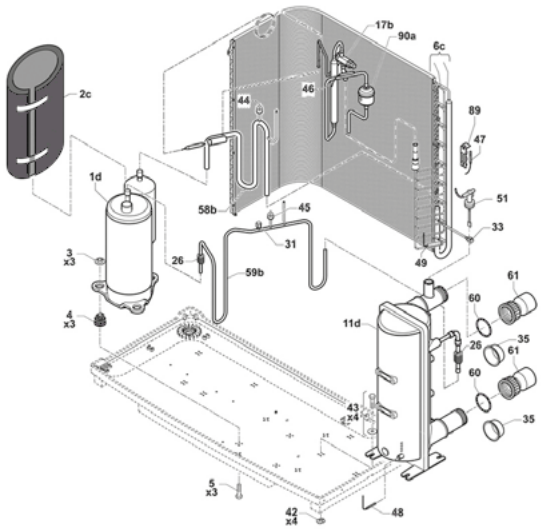

Power First 15

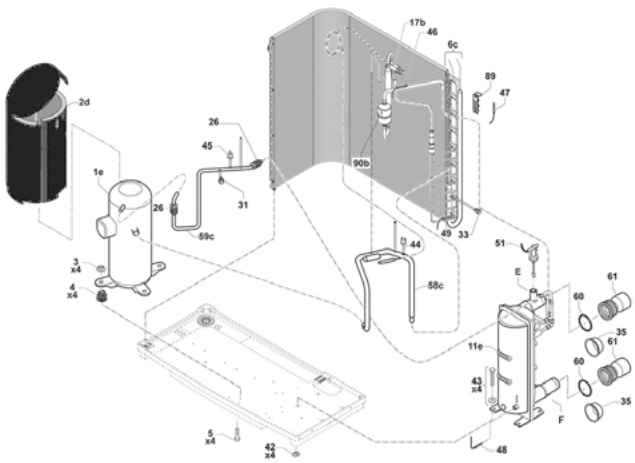

Position	Description	Reference
Electrical spare parts		
36a	Complete electric plate Powerfirst 6 et 8 single phase	WCE03706
36b	Powerfirst 11 single phase complete electric plate	WCE03830
36c	Powerfirst 13 and 15 complete electric plate single phase	WCE03828
40	Regulation plate	WCE03712
48	NTC sensor (water ST1, anti-freeze ST2 or defrosting temperature ST3)	WCE03850
49	NTC sensor (water ST1, anti-freeze ST2 or defrosting temperature ST3)	
47	NTC sensor (water ST1, anti-freeze ST2 or defrosting temperature ST3)	
46	NTC sensor (water ST1, anti-freeze ST2 or defrosting temperature ST3)	
51	Noryl flow switch	WSK02022
66	Ventilator motor	WTC03783
37a	Compressor Condenser 50µf Powerfirst 6, 8 et 11 single phase	B0181100A
37b	Compressor alu Condenser 60µF Powerfirst 13 et 15 single phase	B0181800A
38	Fan Condenser 5 µF	WCE03714
	Contactor Kit Powerfirst	R08090
Refrigerating spare parts		
1a	Panasonic Compressor for Powerfirst 6 single phase	WTC03827
1b	Panasonic Compressor for Powerfirst 8 single phase	WTC03828
1c	Panasonic Compressor for Powerfirst 11 single phase	WTC03870
1d	1-phase Powerfirst 13 single phase Compressor	WTC03900
1e	1-phase Powerfirst 15 single phase Compressor	WTC03904
6a	Evaporator battery for Powerfirst 6 and 8 single phase	WTC03894
6b	Evaporator battery for Powerfirst 11 single phase	WTC03899
6c	Evaporator battery for Powerfirst 13 and 15 single phase	WTC03902
11a	condenser Powerfirst 6 single phase	R06960
11b	condenser Powerfirst 8 single phase	R06961
11c	condenser Powerfirst 11 single phase	R06963
11d	condenser Powerfirst 13 single phase	R06954
11e	condenser Powerfirst 15 single phase	R06957
90a	Dehumidifier 053S Powerfirst 6, 8, 11 et 13 single phase	WCY00995
90b	Dehumidifier 084S Powerfirst 15 single phase	WCY00997
17a	Expansion valve BBIZE 2 Powerfirst 6, 8 et 11 single phase	WTC03906
17b	Expansion valve BBIZE4 3/8 1/2 for Powerfirst 13 and 15 single	WTC03903
44	LP 0.5/2 Bar pressure switch (to be soldered)	WTC03815
45	HP 33/42 Bar pressure switch (to be soldered)	WTC03816
Others		
21	Base	WPV01002
23	Front face	WPV01003
9	Lexan	WCE03829
25	Fan grate	WPV01006
27	Cover	WPV01001
28	Casing corner	WPV01005
29	Rear panel	WPV01004
34	Access Technical access panel	WPV01007
60	Joint for 50 x 1’ 1/2 union	WNS03428
61 60	Set of 2 half-union connectors + gaskets 40/49	W20RDU
67	Ventilator fan	WTC03784
E	Condenser outlet connector with tapping+gasket (before 2016)	R0611001
F	Condenser inlet connector with tapping+gasket (before 2016)	R0611301

*All electric parts on single phased Heat Pumps are sold without condensers.

POWER PAC 1, 2, 3

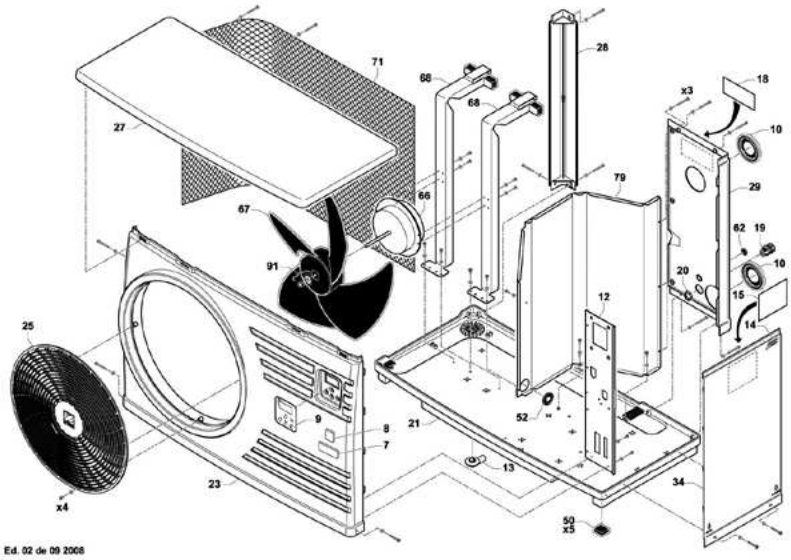

POWER PAC 1, 2, 3

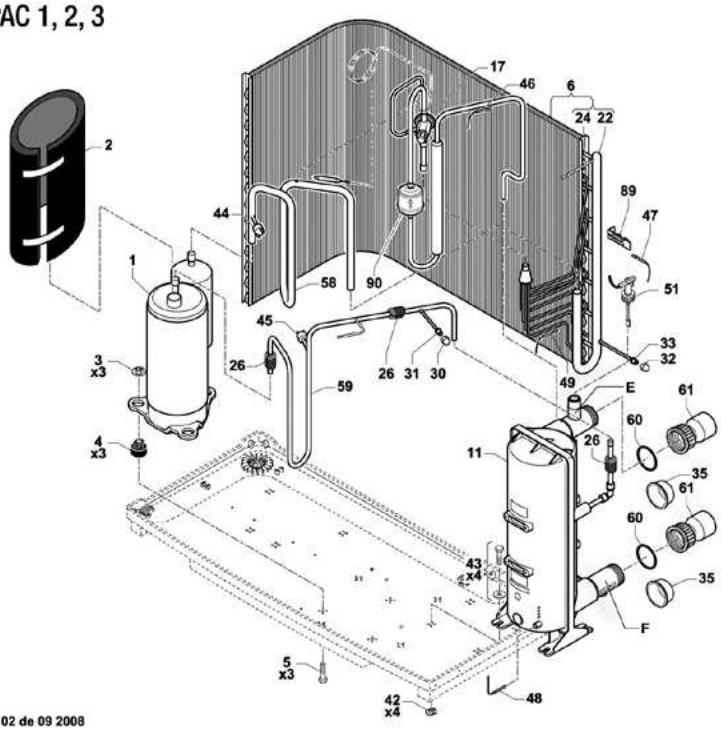

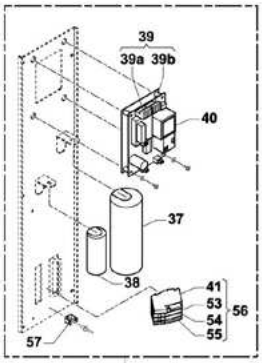

Position	Description	Reference
Electrical spare parts		
40	Regulation plate for Powerpac / Onepac	WCE03712
36	Complete electric plate	WCE03706
48	NTC sensor (water ST1, anti-freeze ST2 or defrosting temperature ST3)	WCE03850
49	NTC sensor (water ST1, anti-freeze ST2 or defrosting temperature ST3)	
47	NTC sensor (water ST1, anti-freeze ST2 or defrosting temperature ST3)	
46	NTC sensor (water ST1, anti-freeze ST2 or defrosting temperature ST3)	
51	Noryl flow switch	WSK02022
66	Ventilator motor	WTC03783
37	Compressor Capacitor 50µf (powerpac 1, 2, 3) C2	B0181100A
38	Fan Capacitor 5 µF (powerpac 1,2,3) C1	WCE03714
	3,15A Fuse	WRD01864
Refrigerating spare parts		
90	Dehumidifier 053S	WCY00995
44	LP 0.5/2 Bar pressure switch (to be soldered)	WTC03815
45	HP 33/42 Bar pressure switch (to be soldered)	WTC03816
1	Panasonic Compressor for Powerpac / Onepac 1 (5KS205DAJ21)	WTC03827
	Panasonic Compressor for Powerpac / Onepac 2m (5KS225DAJ21)	WTC03828
	Panasonic Compressor for Powerpac / Onepac 3m (5JS315DAA)	WTC03870
17	Expansion valve TX3Z35 (powerpac 1 and 2)	WTC03829
	Expansion valve BBIZE 2 GA (powerpac 3)	WTC03906
6	Evaporator battery (powerpac 1 and 2)	WTC03830
	Evaporator battery (powerpac 3)	WTC03873
11	Condenser Powerpac 1	R06960
	Condenser Powerpac 2	R06961
	Condenser Powerpac 3	R06963
Others		
21	Base	W20KITZPHBASE
23	Front face	W20KITZPHFACAV
9	Lexan	WCE03708
25	Blower grate	W20KITZPHGRILLE
28	Casing corner	W20KITZPHCOIN
29	Condenser outlet plate	W20KITZPHPLAQUE
34	Technical access door	W20KITZPHPORTE
91	Ventilator fan	WTC03784
E	Condenser outlet connector with tapping+gasket (before 2016)	R0611001
F	Condenser inlet connector with tapping+gasket (before 2016)	R0611301
60/ 61	Set of 2 half-union connectors + gaskets 40/49	W20RDU
60	Joint for 50 x 1’ 1/2 union	WNS03428
Accessories		
	Winter cover	W20HOUSSEPOWER
	Cleaning Kit HP	WMA03491

*All electric parts on single phased Heat Pumps are sold without condensers.

Edenpac 1, 2, 3, 4 et 5

Spare Parts

FK REGULATOR MODEL WITH PRESSURE GAUGE

For all orders please indicate the Heat Pump serial number

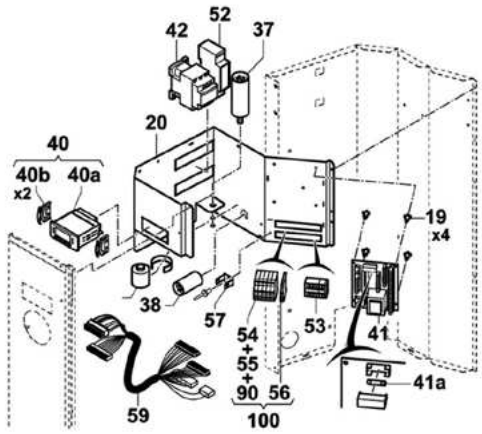

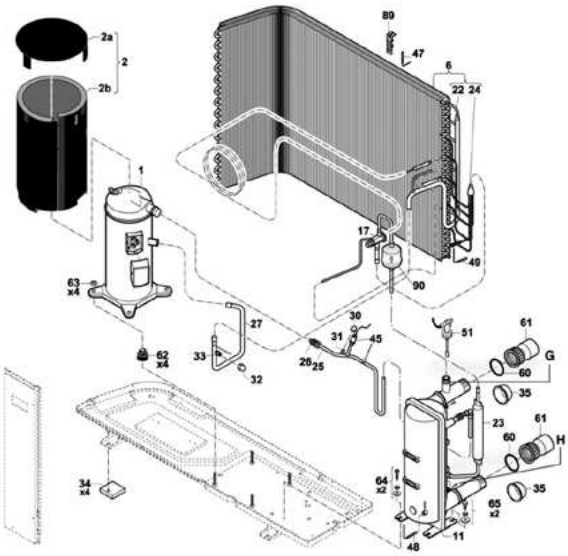

EVK REGULATOR MODEL WITHOUT PRESSURE GAUGE

For all orders please indicate the Heat Pump serial number

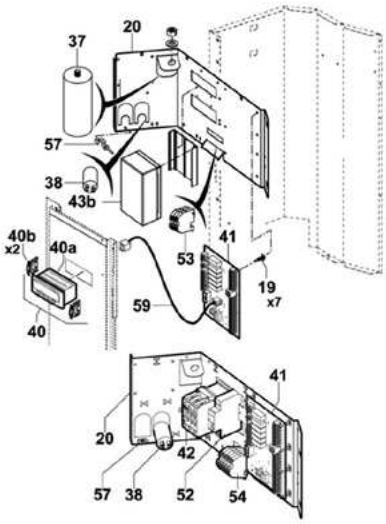

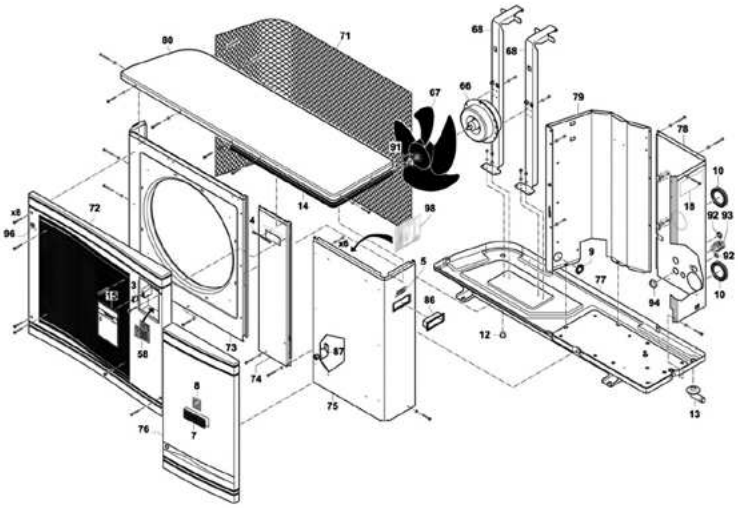

Position	Description	Reference
Electrical spare parts		
37	Compressor alu capacior 45µF (Eden1)	B0181600A
	Compressor capacitor alu 50µF (Eden 2)	B0181100A
	Compressor capacitor alu 60µF (Eden 3)	B0181800A
	Compressor capacitor alu 80µF (Eden 4)	B0181900A
38	Fan Capacitor 6.3µF (Eden 1 to 5)	WCE03695
40	Euro Alpha FK regulator (MAP 6)	WCE03687
41	Euro alpha FK connection plate	WCE03698
59	Euro alpha FK connection braid (Eden 1 to 8)	WCE03554
43a	Starter (1-phase Eden 3 and 4) for EuroAlfa FK	WCE03704

Position	Description	Reference
E	Eden contactor Kit for EVK (substitutes Smart Starter)	R08071
40	EVK Regulator (since 2011)	WCE03823
45	EVK pressure captor	WKE02150
	EVK Connection braid (since 2011)	WCE03824
41	EVK connection plate (since 2011)	WCE03825
	EVK speed regulation card	WCE03826
42	Contactor 9A (Eden 3 et 5 tri) 3RT 1016 1A	WCF01066
	Contactor 18A (Eden 1, 2 et 3 single phase) 3RT 1025 1A	WTC03937
	Contactor 25A	WCF01113
47	NTC sensor (water ST1, anti-freeze ST2 or defrosting temperature ST3)	WCE03850
48	NTC sensor (water ST1, anti-freeze ST2 or defrosting temperature ST3)	
49	NTC sensor (water ST1, anti-freeze ST2 or defrosting temperature ST3)	
51	Noryl flow switch	WSK02022
52	Phase controller Eden 3/5	WCZ01371
66	Ventilator motor	WTC03783
Refrigerating spare parts		
1	ZP26 Compressor single phase 410A Eden 1	WCO03824
	ZP32 Compressor single phase 410A Eden 2	WCO03818
	ZP42 Compressor single phase 410A Eden 3	V0149500
	ZP42 Compressor three phase 410A Eden 3	V0149600
	ZP54 Compressor single phase 410A Eden 4	V0149700
	ZP54 Compressor three phase 410A Eden 5	V0149800
6	Evaporator Eden 1/2	WTC03782
	Evaporator Eden 3	WTC03800
	Evaporator Eden 4/5	WTC03803
17	Expansion valve Eden 1 BBIZE 2 adjustable	WTC03843
	Expansion valve Eden 2 BBIZE 2	WTC03799
	Expansion valve Eden 3 BBIZE 3	WTC03848
	Expansion valve Eden 4/5 BBIZE 4	WTC03847
90	Dehumidifier 053S (Edenpac 1, 2, 3)	WCY00995
	Dehydrator 083S (Eden 4, 5)	WCY00996
21	Manometer for soldering (Eden 1 to 8) until end 2008	WTC03814
	LP 0.5/2 Bar pressure switch (to be soldered)	WTC03815
	HP 33/42 Bar pressure switch (to be soldered)	WTC03816
11	condenser Edenpac 1	R06962
	Condenser for Edenpac 2 and 3	R06953
	Condenser for Edenpac 4 and 5	R06955
Others		
10	Wire tunnel	WSS01986
13 /12	Plastic grooved condensation angle + cap	WKITCONDENSAT
15	Polypropylene gate (Eden 1 to 8)	WIB03653
3	Push bolt	WEM03645
34	Anti vibration pegs (to order by 4)	WAP03064
61/ 60	Set of 2 half-union connectors + gaskets 40/49	W20RDU
60	Joint for 50 x 1’ 1/2 union	WNS03428
G	Hydraulic connector kit - condenser outlet with tapping + gasket	R0611101
H	Hydraulic connector kit - condenser inlet + gasket	R0611201
67	Ventilator fan (Eden 1 à 5)	WTC03784
71	Rear plastic grate	WTC03786
72	Polypropylene grate (Eden 1 to 5)	WIB03652
73	Ventilator shaft (Eden 1 to 5)	WTC03787
74	Manometer front face panel (Eden 1 to 5)	WTC03788
75	Right side door (Eden 1 to 5)	WTC03789
76	Polypropylene right side face (Eden 1 to 5)	WIB03651
78	Back panel (Eden 1 to 5)	WTC03791
Accessories		
	Remote control module EVK	WCE03827
	Winter cover (Edenpac 1 to 5)	W20HOUSSEDEN
	Cleaning Kit HP	WMA03491

*All electric parts on single phased Heat Pumps are sold without condensers.

FK REGULATOR MODEL WITH PRESSURE GAUGE

For all orders please indicate the Heat Pump serial number

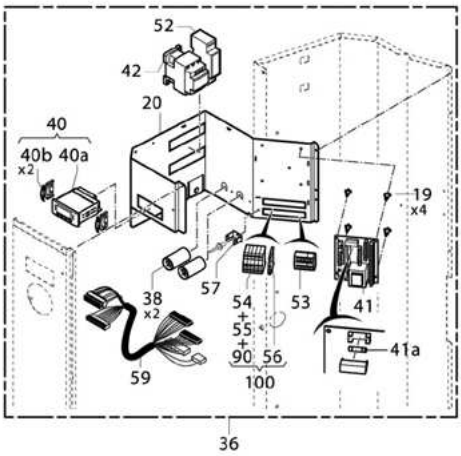

EVK REGULATOR MODEL WITHOUT PRESSURE GAUGE

For all orders please indicate the Heat Pump serial number

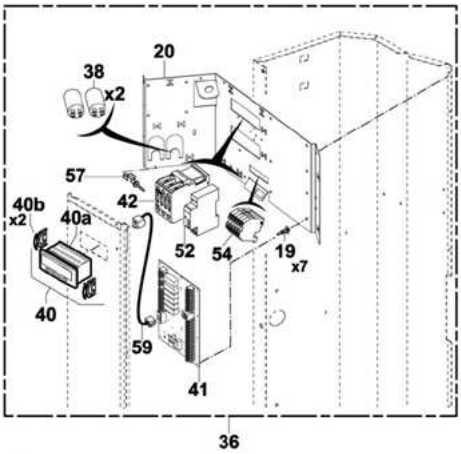

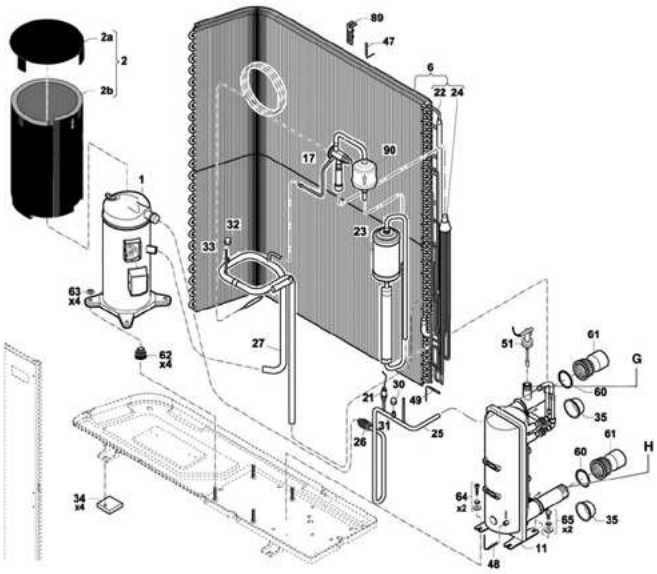

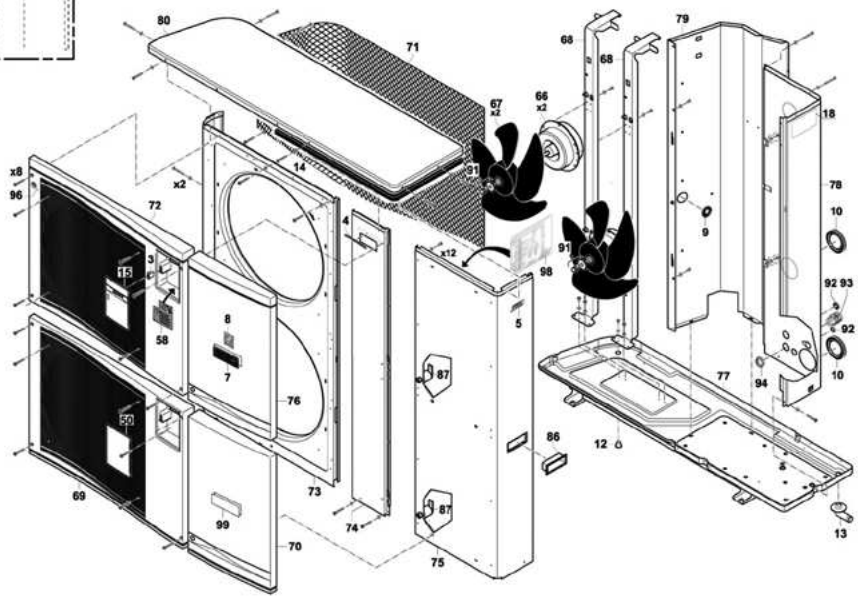

Position	Description	Reference
Electrical spare parts		
38	Fan Condenser 6.3µF (Eden 6 to 8)	WCE03695
H	Compressor alu Condenser 60µF (Eden 7 single phase)	B0181800A
40	Euro Alpha FK regulator (since 2004) MAP 2	WCE03687
41	Euro alpha FK connection plate (since 2007)	WCE03698
59	Euro alpha FK connection braid	WCE03554

Position	Description	Reference
F	Starter (Eden 3 and 4 single phase) for EuroAlfa FK	WCE03704
4A	EVK Regulator (since 2011)	WCE03823
4B	EVK pressure captor	WKE02150
4C	EVK Connection braid (since 2011)	WCE03824
4D	EVK connection plate (since 2011)	WCE03825
	EVK speed regulation card	WCE03826
	Smart starter for EVK	WCE03832
42	18A Contactor (Eden 7 and 8 single phase) 3RT 1025 1A	WCE03690
42	12A Contactor (Eden 6 tri phase) 3RT 1024 1A	WCE03693
47	NTC sensor (anti-freeze ST2 / black)	WCE03850
48	NTC sensor (water temperature ST1 /white)	
49	NTC sensor (defrosting temperature ST3/ grey)	
51	Noryl flow switch	WSK02022
52	Phase controller Eden 6/8 tri	WCZ01371
66	Ventilator motor (Eden 6 to 8)	WTC03783
67	Ventilator fan	WTC03784
I	36s timer for Compressor startup Eden 7 single phase	WCE03715
Refrigerating spare parts		
1	ZP90 Compressor three phase 410A Eden 8	WCO03846
	ZP42 Compressor ZP42 single phase Eden 7	V0149500
	ZP72 Compressor three phase 410A Eden 6	WCO03823
6	Evaporator Eden 6 three phase	WTC03805
	Evaporator Eden 8 three phase	WTC03845
	Evaporator Eden 7 single phase	WTC03844
17	Expansion valve Eden 8 tri phase adjustable	WAC02960
	Expansion valve Eden 3 BBIZE 3	WTC03848
	Expansion valve Eden 6 (BBIZE6)	WTC03806
21	Manometer 410 for soldering (Eden 1 to 8) until end 2008	WTC03814
	LP 0.5/2 Bar pressure switch (to be soldered)	WTC03815
	HP 33/42 Bar pressure switch (to be soldered)	WTC03816
90	Dehumidifier 084S Eden 6 and 8	WCY00997
	Dehumidifier 053S Eden 7	WCY00995
11	Condenser for Edenpac 6 and 8	R06958
	Condenser for Edenpac 7	R06956
Others		
41609	Plastic grooved condensation angle + cap	WKITCONDENSAT
15	Polypropylene gate (Eden 1 to 8)	WIB03653
3	Push bolt	WEM03645
34	Anti vibration pegs (to order by 4)	WAP03064
61/60	Set of 2 half-union connectors + gaskets 40/49	W20RDU
60	Joint for 50 x 1' 1/2 union	WNS03428
G	Hydraulic connector kit - condenser outlet with tapping + gasket	R0611101
H	Hydraulic connector kit - condenser inlet + gasket	R0611201
	Inlet / outlet connector seals	WJW03580
69	Polypropylene lower grate (Eden 6 to 8)	WIB03657
70	Polypropylene lower face (Eden 6 to 8)	WIB03658
72	Polypropylene upper grate (Eden 6 to 8)	WIB03659
73	Double Ventilator shaft (Eden 6 to 8)	WTC03809
74	Manometer front face panel (Eden 6 to 8)	WTC03810
75	Right side door (Eden 6 to 8)	WTC03811
76	Polypropylene upper face (Eden 6 to 8)	WIB03660
78	Back panel (Eden 6)	WTC03813
	Back panel (Eden 7/8)	WTC03775
Accessories		
	Remote control module EVK	WCE03827
	Winter cover (Edenpac 6 to 8)	W20HOUSSEDEN6
	Cleaning Kit HP	WMA03491

*All electric parts on single phased Heat Pumps are sold without condensers.

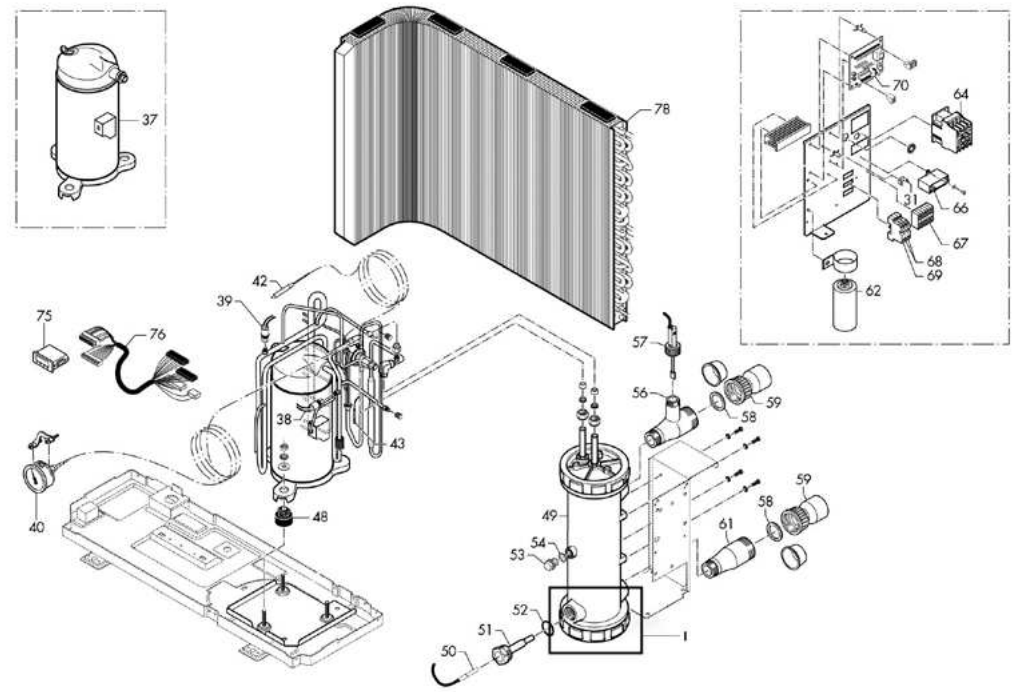
37
78
70
64
31
66
67
68
69
62
42
39
75
76
57
56
59
58
38
43
40
48
49
54
53
52
51
50
1

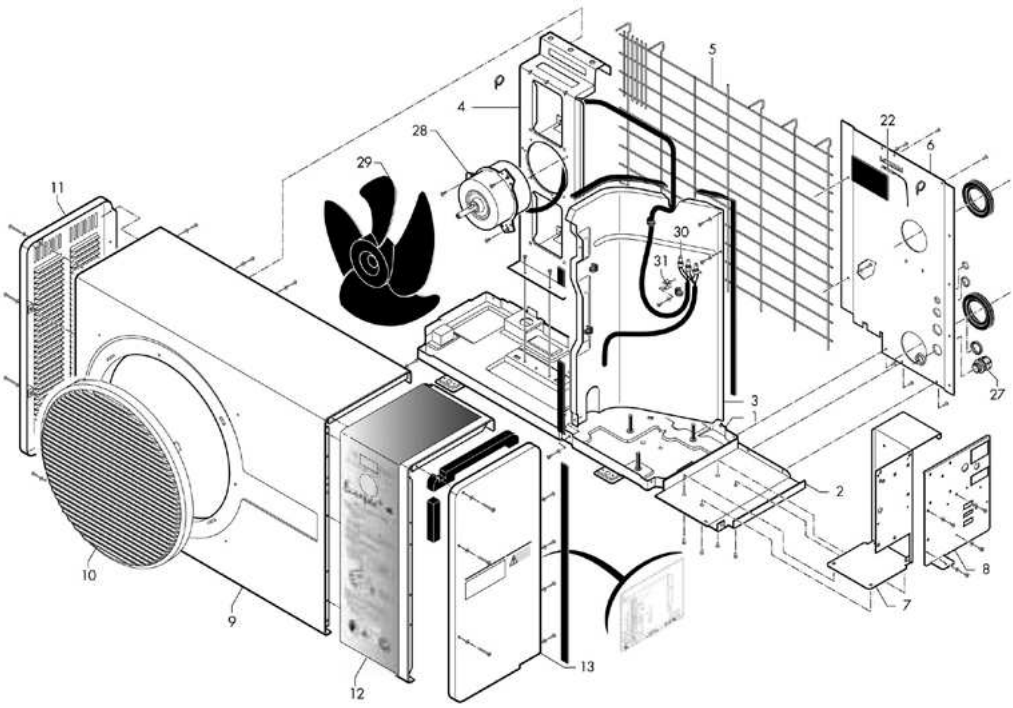
5
4
28
29
22
6
11
30
31
27
3
2
10
9
8
7
13
12

Position	Description	Reference
Electrical spare parts		
70	Euro alpha FK A1 plate (since 2004)	WCE03553
75	Euro alpha FK (MAP1) regulator (2004)	WCE03688
76	Euro alpha FK connection braid	WCE03554
	Display + card (replacing mini alpha Regul.)	WKITEUROALFA
28	Ventilator motor 19 TFB6055	WTC02140
	2µF Capacitor	WSG01933
42/22/50	NTC sensor (water ST1, anti-freeze ST2 or defrosting temperature ST3)	WCE03850
57	Noryl flow switch	WSK02022
62	Compressor Condenser 40 µF C2	B0181500A
64	Contactor compressor KM1	WCF01113
66	2µF C1 capacitor	WSG01933
Refrigerating spare parts		
37	Compressor ZR22 single phase 3 feet	WTC03056
	Compressor ZR22 single phase 4 feet	WCO02576
38	HP Pressure switch* 20-26 B (to be screwed)	WJC01669
39	LP Pressure switch* 0.5/2 B (to be screwed)	WJC01668
40	Flow manometer with capillary 407C	WTC03084
42	Expansion valve TX3 N36	WAC02499
	Dehumidifier 053S	WCY00995
Others		
29	Fan	WTC02149
51/ 52	Polyamide glove finger 1"	WIB01635
	Polyamide glove finger 1"	WNS01779
56	Condenser connection 7M without fixture (water outlet)	WIB01633
61	Condenser connection 7M without fixture (water inlet)	WIB01634
	Condenser connection joint, 24/31 joint thickness 4	WJW01665
58 /59	Set of 2 half-union connectors + gaskets 40/49	W20RDU
58	Joint for 50 x 1' 1/2 union	WNS03428
	Anti vibration pegs (to order by 4)	WAP03064
I	Water condenser 7M kit (bolt + spire support + joint)	WKITGELCOND7M
	Plastic grooved condensation angle + cap	WKITCONDENSAT

*All electric parts on single phased Heat Pumps are sold without condensers.

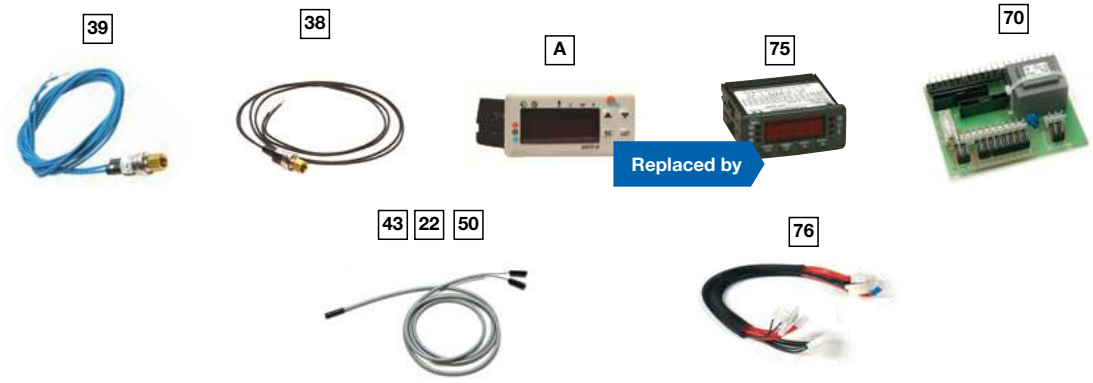

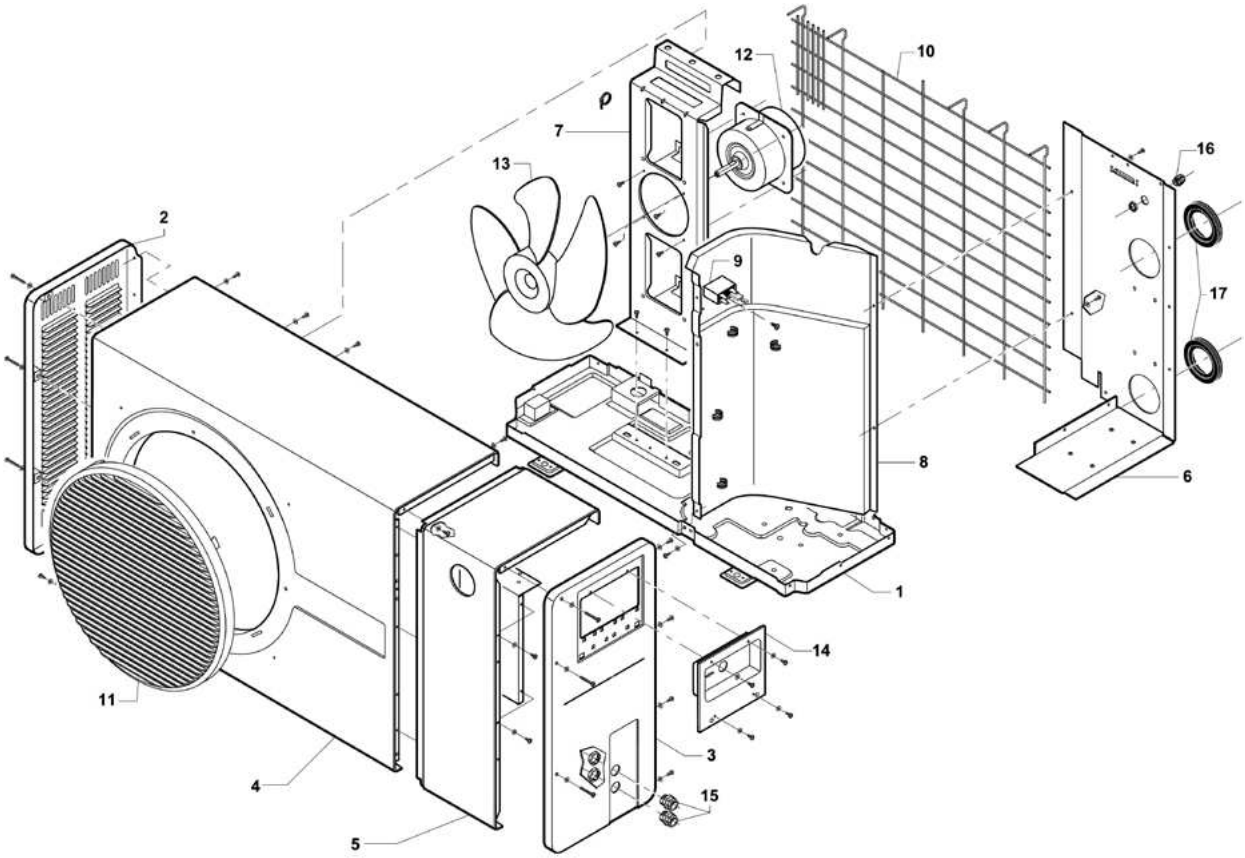

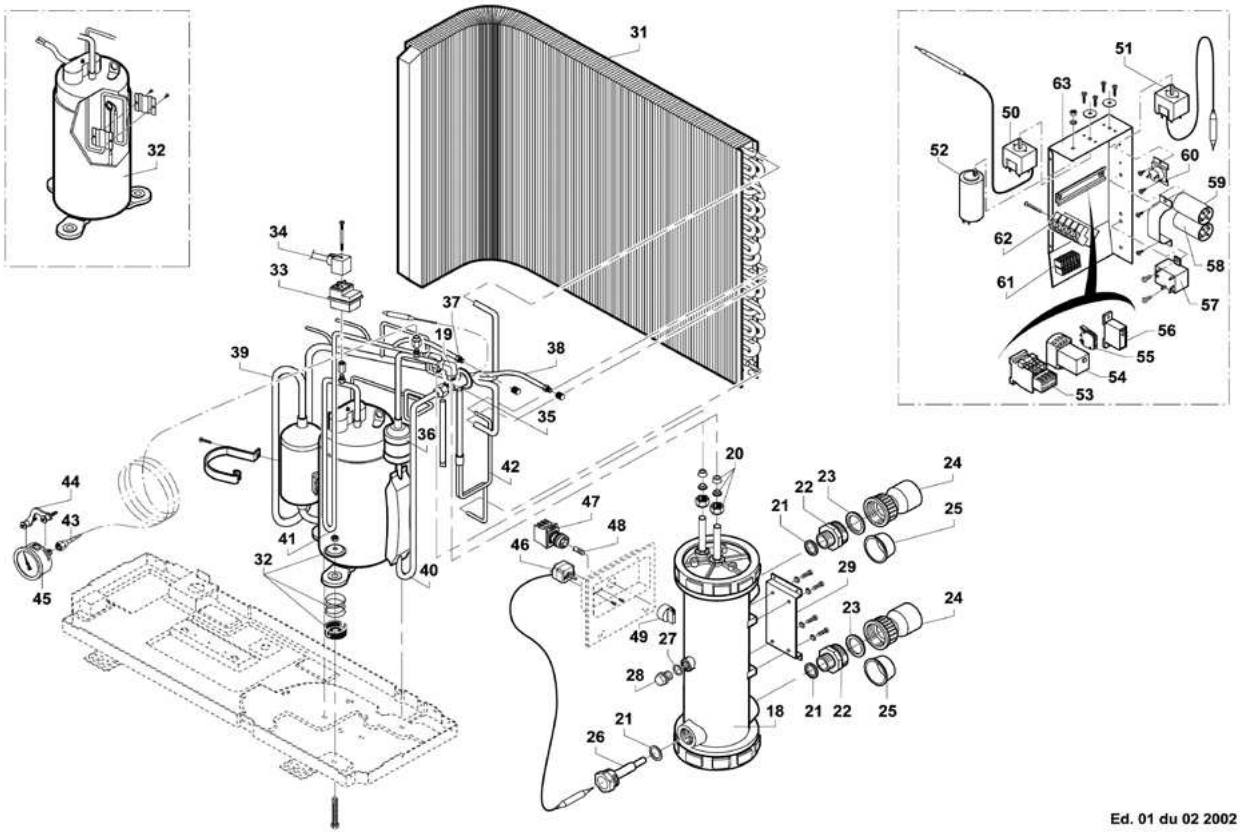

Ed. 01 du 02 2002

Position	Description	Reference
Electrical spare parts		
12	Ventilator motor 19 TFB6055	WTC02140
52	Compressor Capacitor 40 µF C2	B0181500A
9	2µF Capacitor fan	WSG01933
D	Regulation thermostat 16/40 B.10	WEG01404
E	Anti-freeze thermostat (with ECP 231)	WIN01645
F	Starter Compressor condensers 125µF C5	W20CA21
G	Rotating On/Off switch with indicator	W20INTERE
H	Static timer 300 S KA3	WCZ01370
53	Contactor compressor KM1	WCF01113
54	Default relay KA2	WTC02153
Refrigerating spare parts		
40	Flow manometer with capillary	WTC03084
	Expansion valve TX3 N36	WAC02499
36	Dehumidifier 053S	WCY00995
33	Pressostat HP 16/21Bars	WAC02495
Others		
13	Fan	WTC02149
23 /24	Set of 2 half-union connectors + gaskets 40/49	W20RDU
	Anti vibration pegs (to order by 4)	WAP03064

*All electric parts on single phased Heat Pumps are sold without condensers.

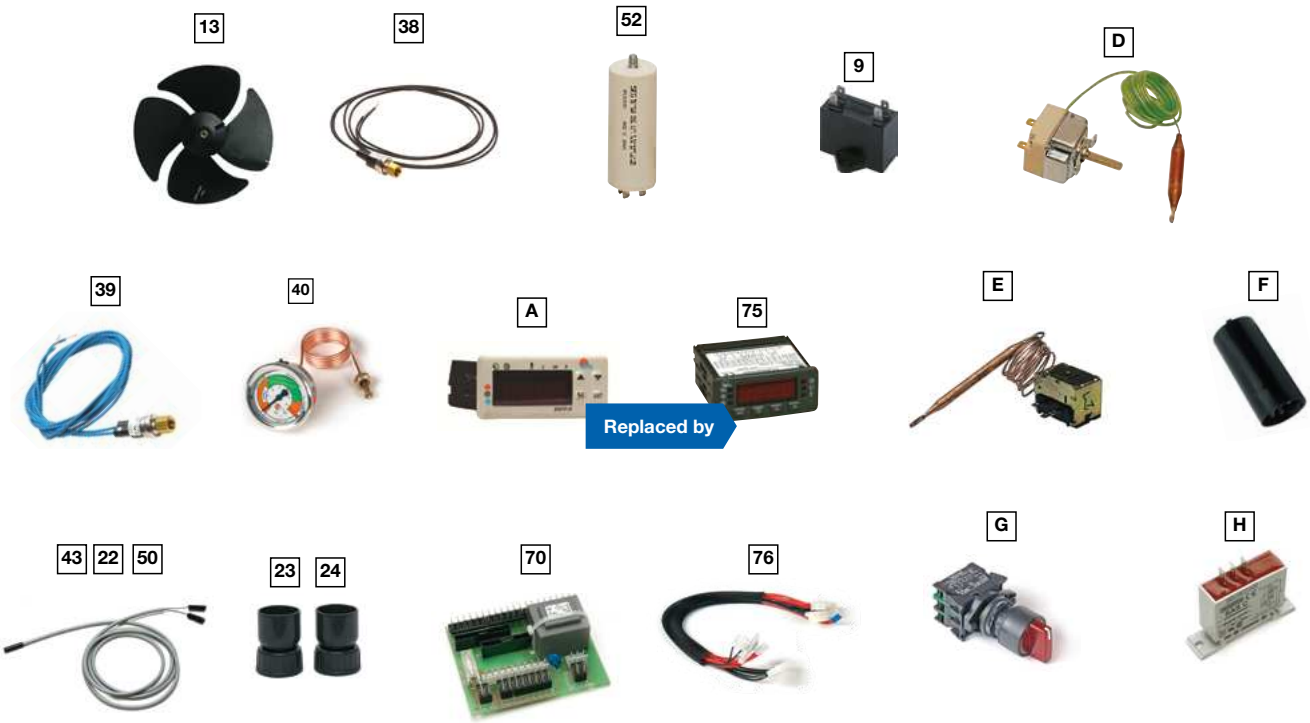

Optipac 2, 3, 4, 7, 10, 15, 15D, 30 & 30D

Spare Parts

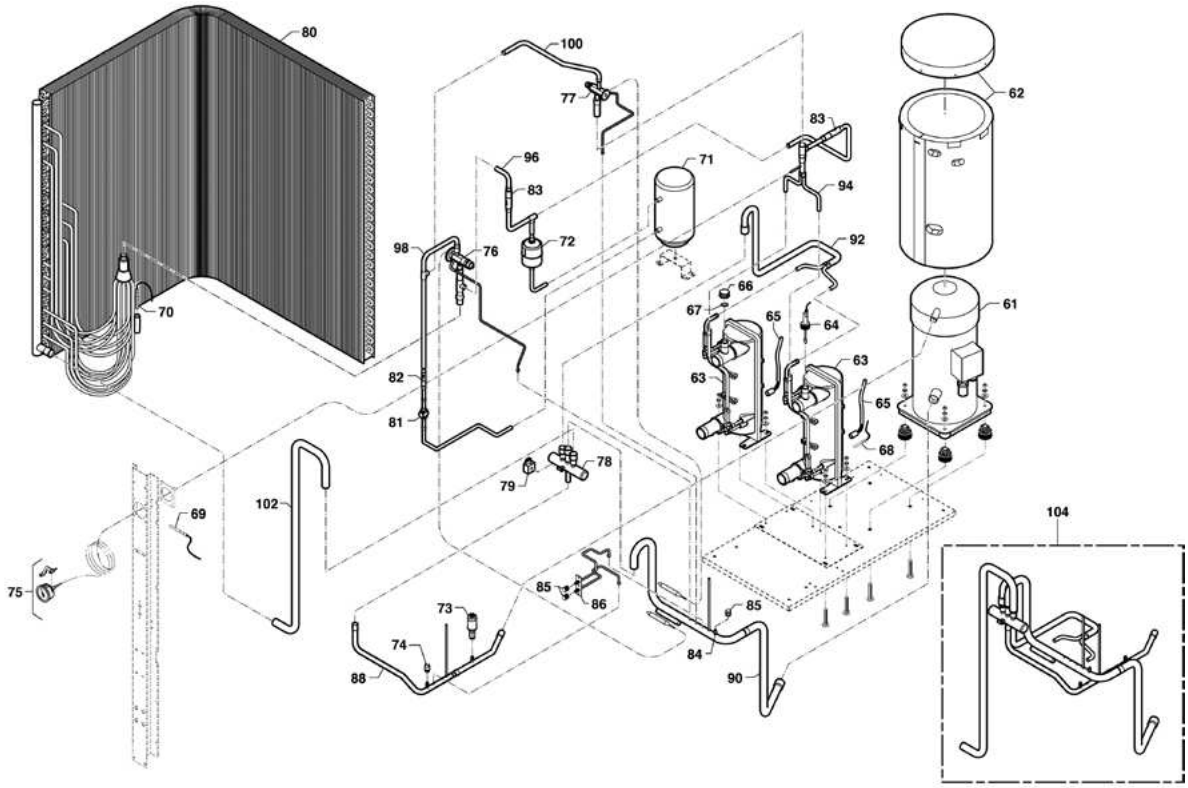

Position	Description	Reference
Electrical spare parts		
12	Ventilator motor 150W (Optipac 2, 3, 4, 7*) with fan	WTC02143
	Ventilator motor 378 W (Optipac 10)	WTC02142
	Ventilator motor 530W (Optipac 15 and 30)	WTC02144
64	Noryl flow switch	WSK02022
47a	Timed regulator ECP 331 (2000 to 2003 model, grey connectors)	WCE01309
A	Euro alpha FK (MAP1) regulator (2004)	WCE03688
B	Euro alpha FK A1 plate (Optipac) (since 2004)	WCE03553
C	Euro alpha FK connection plate for Optipac 30 and 15D (since 2007)	WCE03698
	EVK Regulator for Optipac 15D & 30D (since 2011)	WCE03823
	EVK Connection braid for Optipac 15D & 30D (since 2011)	WCE03824
	EVK connection plate for Optipac 15D & 30D (since 2011)	WCE03825
D	Euro alpha FK connection braid	WCE03554
53	Compressor contactor* (Optipac 2, 3 single 7 three phase) 18A	WTC03085
	Compressor contactor* (Optipac 3, 4 three phase) 9A	WTC03086
	Compressor contactor (Optipac 15/30) 32A	WTC03087
	Compressor contactor (Optipac 10)	WTC03088
54	Fan contactor* (Optipac 2, 3, 4, 7) 9 A	WTC03089
	Compressor contactor* (Optipac 3, 4 three phase) 9A	WTC03086
59	Compressor Capacitor 50µf (Optipac 2)	B0181100A
	Compressor Capacitor 55µf (Optipac 3)	B0181700A
60	Fan Capacitor 4 µF (Optipac 2, 3 and 7)	WSG01938
	Fan Capacitor 5 µF (Optipac 4)	WCE03714
65	Defrosting sensor (grey)	WCE01312
68	Temperature sensor (black)	WCE01311
E	NTC sensor (water ST1, anti-freeze ST2 or defrosting temperature ST3)	WCE03850
F	NTC sensor (water ST1, anti-freeze ST2 or defrosting temperature ST3)	
G	Phase controller	WCZ01371
78	4-way valve Optipac 15D and 30D	WTC03948
	Starter relay SPP5	WGF02960
	Anti-freeze thermostat (with ECP 231)	WIN01645
	4-way coil Optipac 15D et 30D	WTC03836
	Transfo 400/230 V Optipac 15/30	R06708
	EVK pressure captor	WKE02150

Position	Description	Reference
Refrigerating spare parts		
32	Compressor ZR 34 407C (Optipac 2)	WCO02581
	Compressor ZR 40 407C (Optipac 3 et 3D single phase)	WCO02590
	Compressor ZR 40 407C (Optipac 3 tri)	WCO02687
	ZR48 Compressor 407C (Optipac 4)	WCO02589
	Compressor ZR81 407C (Optipac 7et 7D)	WCO02688
	SZ100 Compressor S4VA 407C (Optipac 10)	WTC02864
	Compressor MS161 S4AM 407C (Optipac 15/30, 15D and 30D)	WTC02138
33	HP Pressure switch* 20-26 B (to be screwed)	WJC01669
	LP Pressure switch* 0.5/2 B (to be screwed)	WJC01668
35	Expansion valve TX3 N36 (since 2003)	WAC02499
	Expansion valve TX3 N38 (since 2003)	WAC02501
	Expansion valve Optipac 2 and 3 (BIVE-2-1/2-GA-B15) SPORLAND before 2003	WTC03886
	SPORLAND Expansion valve Optipac 4 (EFVE-3-CP100)	WTC03887
	SPORLAND Expansion valve Optipac 7 (SVE 4 CP100)	WTC03110
	SPORLAND Expansion valve Optipac 10, 15 and 30	WTC03888
	Expansion valve TX7N15 (Optipac 15 et 30 D)	WAC02961
	Dehumidifier 053S (Optipac 2, 3, 3D)	WCY00995
	Dehumidifier 084S (Optipac 4, 7D)	WCY00997
	Dehydrator 164S (Optipac 7, 10, 15, 30, 15D et 30D)	WCY00998
42	Liquid indicator 34S	WCY01001
45	Flow manometer with capillary 407C	WTC03084
63	Condenseur 25KW for Optipac 15 et 30	R06957
	Flexible inlet manifold	W20COLPAC30EN06
	Flexible outlet manifold	W20COLPAC30SO06
	Flexible manifold bracket	WTC04006
Others		
72	Regulator access window	WTC02172
23 / 24	Set of 2 half-union connectors + gaskets 40/49	W20RDU
23	Joint for 50 x 1' 1/2 union	WNS03428
26	Polyamide glove finger 1"	WIB01635
	Condenser connection 7M without fixture (water inlet)	WIB01634
	Condenser connection 7M without fixture (water outlet)	WIB01633
21	Condenser connection joint, 24/31 joint thickness 4	WJW01665
	Anti vibration pegs (to order by 4)	WAP03064
100	Quarter turn plastic button	WTC02171
	2 1/2 union connections Ø 63 + adjusters Ø 50	W20RDU
	Plastic grooved condensation angle + cap	WKITCONDENSAT
	Water condenser 7M kit (bolt + spire support + joint)	WKITGELCOND7M
	Condenser outlet connector with tapping+gasket (before 2016)	R0611001
	Condenser inlet connector with tapping+gasket (before 2016)	R0611301
	3 pieces connection kit diam. 90 (Optipac 30)	WIP03450
Accessories		
	Remote control module EVK	WCE03827
	Cleaning Kit HP	WMA03491

*All electric parts on single phased Heat Pumps are sold without condensers.

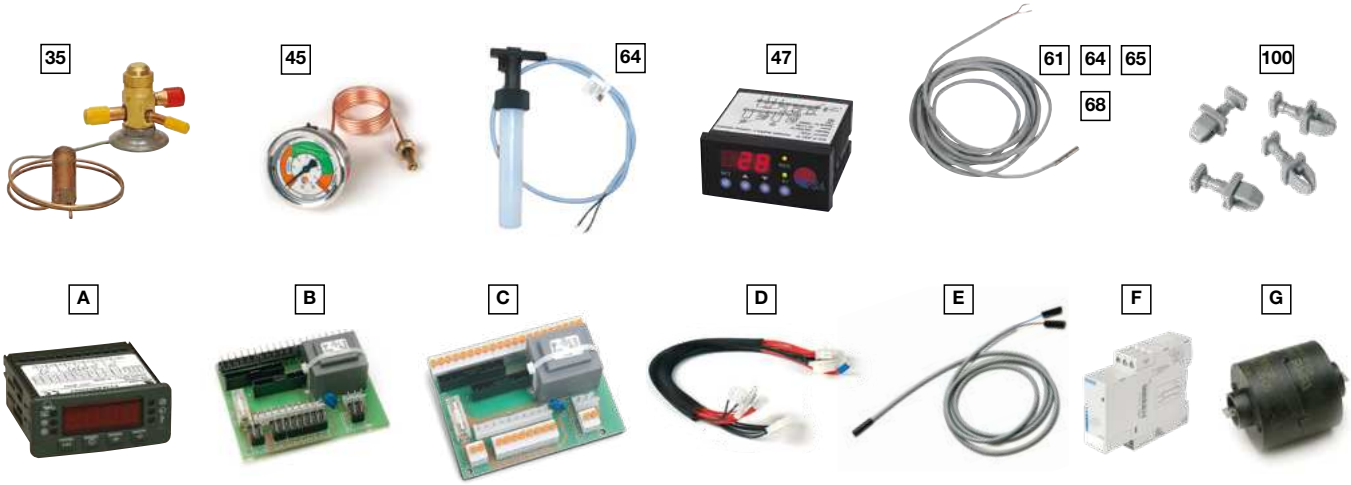

Optipac Defrost

Spare Parts

Description	Reference
Electrical spare parts	
Euro Alpha FK regulator (since 2004) MAP 2 (Optipac)*	WCE03687
Euro alpha FK speed regulation module (since 2004) ventilator 500W A2	WCE03576
Euro alpha FK A1 plate (Optipac) (since 2004)	WCE03553
NTC sensor (water ST1, anti-freeze ST2 or defrosting temperature ST3)	WCE03850
Euro alpha FK connection braid	WCE03554
Regulator μ chiller (before 2004)	WTC02154
Ventilation plate μ chiller A1 (before 2004)	WTC03604
Connection plate μ chiller A2 (before 2004)	WTC03603
Regulator sensor μ chiller (before 2004)	WTC03090
Refrigerating spare parts	
Expansion valve TX3 N36 (on condenser	WAC02499
Expansion valve TX3 N37 on evaporator	WAC02500
Expansion valve TX3 N36 on condenser	WAC02499
Expansion valve TX3 N39 on evaporator	WAC02753
4 channel vane kit	WTC03834

*All electric parts on single phased Heat Pumps are sold without condensers.

Edenpac Defrost

	Reference
Electrical spare parts	
Euro Alpha FK regulator (since 2004) MAP 8 (Eden 3/4/5/6 D)	WCE03687
NTC sensor (water ST1, anti-freeze ST2 or defrosting temperature ST3)	WCE03850
NTC sensor (water ST1, anti-freeze ST2 or defrosting temperature ST3)	
NTC sensor (water ST1, anti-freeze ST2 or defrosting temperature ST3)	
Euro alpha FK connection plate (since 2007)	WCE03698
Euro alpha FK speed regulation module (since 2004) ventilator 500W A2	WCE03576
EVK Regulator (since 2011)	WCE03823
EVK pressure captor	WKE02150
EVK speed regulation card	WCE03826
EVK Connection braid (since 2011)	WCE03824
EVK connection plate (since 2011)	WCE03825
Remote control module EVK	WCE03827
Defrosting contact sensor	WCE03716
Condenser anti-freeze resistance	WTC03842
Edenpac carter resistance kit, optional (Edenpac Defrosting)	WKITRESCARTER
Refrigerating spare parts	
4 channel vane (Eden 3D/4D/5D)	WTC03832
4 channel vane (Eden 6D)	WTC03833
4-way coil 230V	WTC03836
Expansion valve Eden 3D	WTC03848
Expansion valve Eden 4D/5D BBIZE4 adjustable	WTC03847
Byflow expansion valve (Eden 6D) BBIZE6	WTC03831
Byflow dehydr. filter (Eden 3/4/5 D)	WDA01388
Byflow dehydr. filter (Eden 6D)	WDA01389
Condenser 16kW for Edenpac 3D	R06955

*All electric parts on single phased Heat Pumps are sold without condensers.

Red Line et RE/DC

Spare Parts

4

6

8 9

10

11

19

B

A

Position	Description	Reference
Electrical spare parts		
4	Safety thermostat 63°	WIN01641
6	Noryl Flow Switch	WSK02015
7	Elec. connection terminals	WCC01289
9 /8	Shunt for switching from three to single phase except 12 kW	WCC01287
	Shunt for switching from three to single phase except 12 kW	WCC01288
10	contactor DILM9-10	WCF01066
11	ECP 200 Regulator** (or EVX 402)	WCE02684
27	Sticker for electrical box front panel	WSR02733
20 / 21 / 19	Elbowed resistance 3 kW titanium + joint	WKITRES3C
	Elbowed resistance 6 kW titanium + joint	WKITRES6C
	Elbowed resistance 9 kW titanium + joint	WKITRES9C
	Elbowed resistance 12 kW titanium + joint	WKITRES12C
31	Extraction sensor	WCE01311
A	Regulation thermostat 16/40 B.10	WEG01404
B	Digital regulator ECP 230 (ECP 233 replacement)	WCE01307
	Red Line orange on/off switch	WSX03025
Others		
21/ 1	Red Line base (+gasket)	WIB02691
2	Red Line cover + adhesive	WKITCAPOTRDE
22	Red Line body 3 kW, 6 kW	WIB01596
21	Moulded joint 752 X 4	WJW01662
23	Joint 66.27 x 3.53	WJW01661
21 / 22	Red Line body 9 kW, 12 kW	WIB01597
21	Moulded joint 752 X 4	WJW01662
23	Joint 66.27 x 3.53	WJW01661
24/25/26	2 1/2 union connections Ø 63 + adjusters Ø 50	W40RDU

* For all orders for spare parts please give the serial number of the heater.

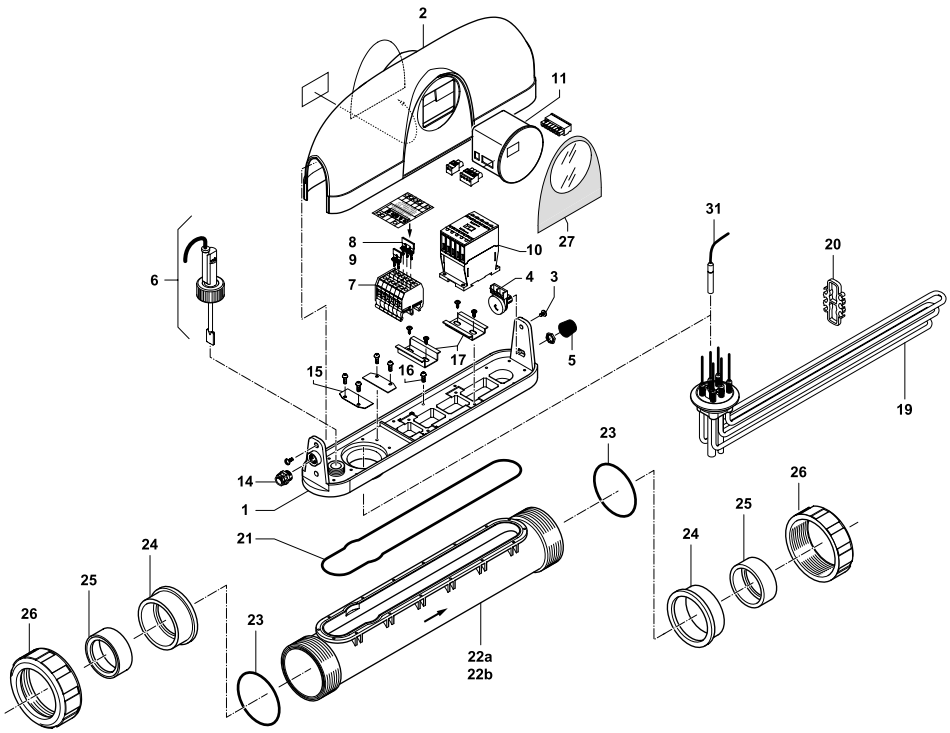

RE/L

1

4

Position	Description	Reference
Electrical spare parts		
1	Regulation thermostat 16/40 B.10	WEG01404
2	Red Line orange on/off switch	WSX03025
3	Noryl flow switch	WSK02022
4	Safety thermostat 63°	WIN01641
7	Elec. connection terminals	WCC01289
9 /8	Shunt for switching from three to except 12 kW single phase	WCC01287
	Shunt for switching from three to except 12 kW single phase	WCC01288
10	Contactor DILM9-10	WCF01066
11/12	Straight resistance kit 3 kW titanium + spacer	WKITRES3D
	Straight resistance kit 6 kW titanium + spacer	WKITRES6D
	Straight resistance kit 9 kW titanium + spacer	WKITRES9D
	Straight resistance kit 12 kW titanium + spacer	WKITRES12D
A	Three phase safety thermostat	WEG01407
B	Regulation thermostat 16/40 bulb Ø 6 mm	WEG01405
C	Pressure switch 153 ml/b	WCE03365
Others		
13	Body RE/L3 and 6 kW	WIB01606
	Body RE/L9 and 12 kW	WIB01605
19/15	2 1/2 union connections Ø 63/50	W40RDL
24/16	Height adjuster + joint	R07233
17	Box	WIB01612
14	Split left/right nut	WIB01608

* For all orders for spare parts please give the serial number of the heater.

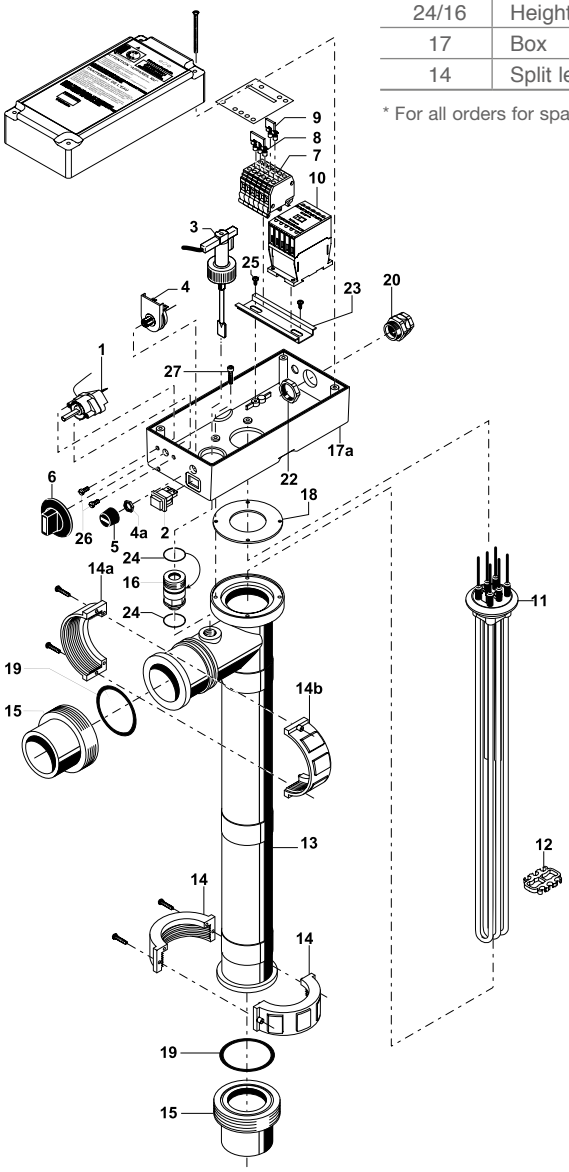

8 9

10

11

A

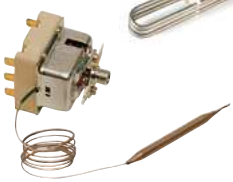

B

C

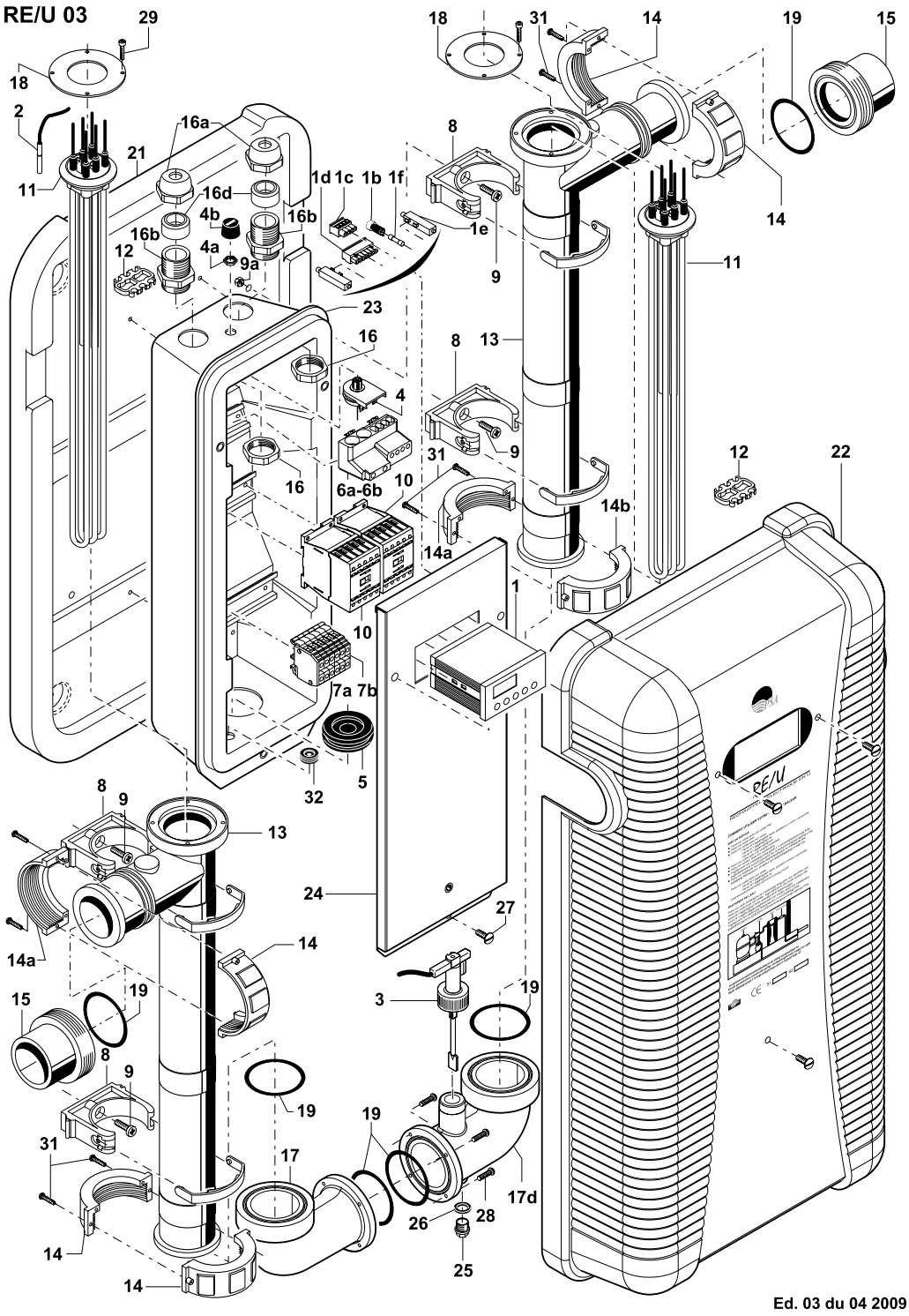
RE/U 03
29
18
2
11
21
16a
16d
4b
16b
12
4a
9a
1d 1c 1b 1f
16b
1e
8
9
18
31
14
19
15
14
11
23
16
8
13
4
9
31
16
6a-6b
10
14a
12
22
14b
1
10
7a 7b
5
32
8
9
13
24
27
14a
14
15
19
3
19
8
9
19
19
31
17
17d
26
28
14
25
14
RE/U
Ed. 03 du 04 2009

Position	Description	Reference
Electrical spare parts		
1	Timed regulator ECP 230 (RE/U RE/I) 2 channels	WCE01307
2	Digital thermostat sensor PTC 100	WCE01311
3	Noryl flow switch	WSK02022
	Stainless steel flow switch (RE/I)	WSK02014
4	Safety thermostat 63° (RE/U, RE/I)	WIN01641
	Safety thermostat 63° (from RE/I 60)	WUN02423
6	Star point (RE/U)	W40PERU
7	Elec. connection terminals (RE/U)	WCC01293
10	Contactor DILM 9-10 (RE/U RE/I 30kW to 48kW)	WCF01066
12/11	Straight resistance kit (RE/U) 3 kW titanium + spacer	WKITRES3D
	Straight resistance kit (RE/U, RE/I) 6 kW titanium + spacer	WKITRES6D
	Straight resistance kit (RE/U, RE/I) 9 kW titanium + spacer	WKITRES9D
	Straight resistance kit (RE/U, RE/I) 12 kW titanium + spacer	WKITRES12D
A	Basic digital regulator EVK 411	WCE02925
B	Digital thermostat transformer	WCE01305
	Contactor RE/I g.p DILM 40 (RE/I 60/72)	WCF01064
	Contactor RE/I g.p DILM 50 (RE/I 84/96)	WCF01070
	Contactor RE/I g.p DILM 65 (RE/I 108/120)	WCF01071
	On/Off switch, green light (RE/U)	WSX02010
	Light (RE/U, RE/I)	WSX03023
Others		
	2 1/2 union connectors Ø 63 RE/I	W20RDU1
	RE/I cover medium power	WRB01856
	RE/I cover high power	WRB01855
13 / 14 / 17 / 18 / 19	RE/U polyamide body	W40CORREU
19/15	2 1/2 union connections Ø 63/50 RE/U	W40RDL

* For all orders for spare parts please give the serial number of the heater.

1

2

3

4

10

11

A

B

HEAT LINE +

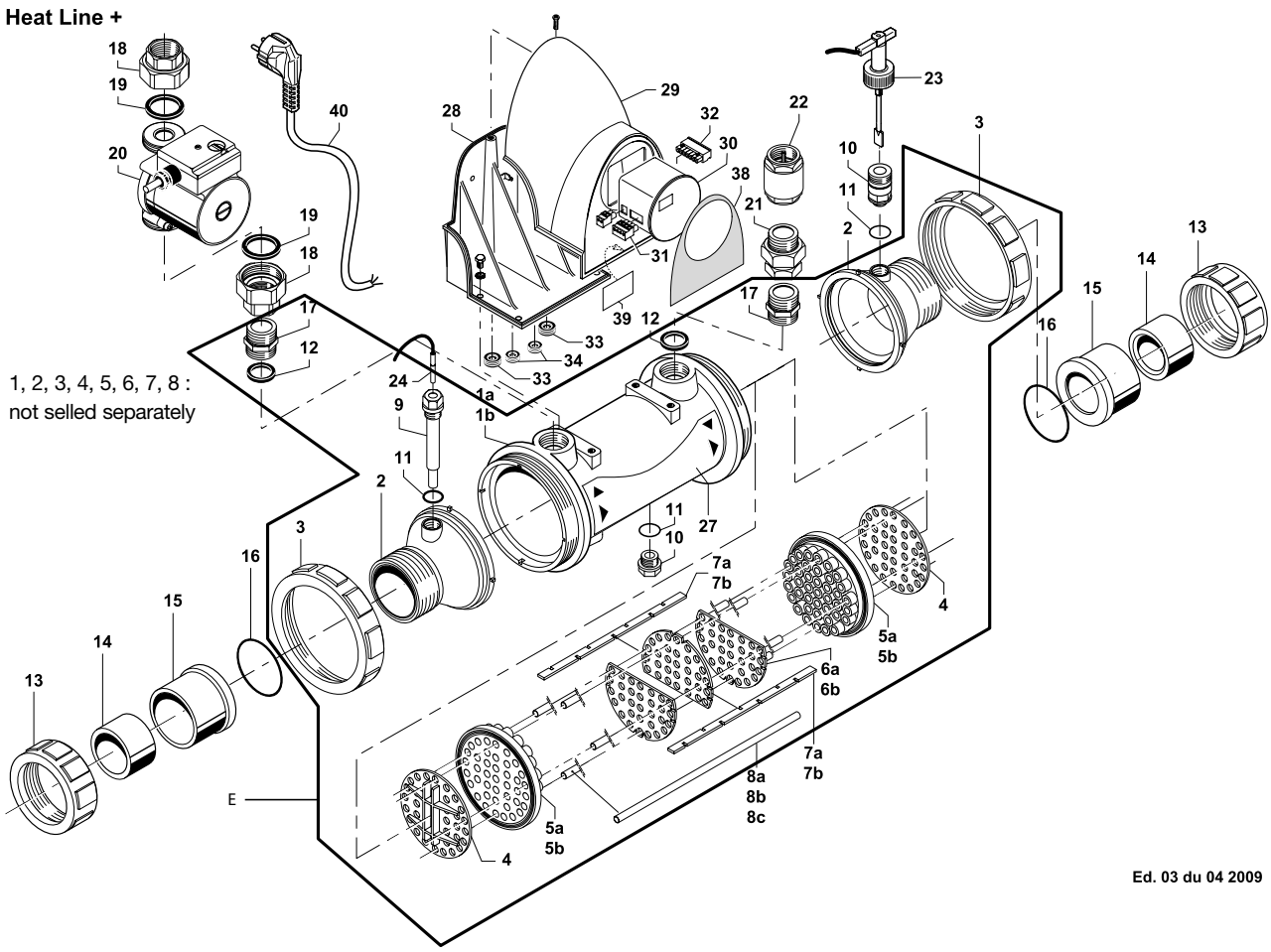

Ed. 03 du 04 2009

Position	Description	Reference
Electrical spare parts		
20	Circulator EC/C, EC/K, Heat Line + set of 2 connection pieces 26/34 and joints	R07122
18 19	Set of 2 connection pieces 26/34 and joints	WGR01540
23	Noryl flow switch	WSK02022
24	Extraction sensor	WCE01311
30	ECP 200 Regulator** (or EVX 402)	WCE02684
38	Sticker for the electrical box front panel	WSR02735
23 10 42	Electric box (Heat Line+) and height adjuster with flow switch	W49COFKT
A	Digital regulator ECP 230	WCE01307
B	Aquastat 16/40° with glove finger 15/21M (unequipped HEAT LINE)	W20KD02
C	Regulation thermostat 16/40 B.10 mm	WEG01404
D	Regulation thermostat 16/40 bulb Ø 6 mm	WEG01405
	Digital regulator EVK411	WCE02925
Others		
21	3 Pieces connection 26/34	WMO01713
11 / 9	Threaded polyamide glove finger 15/21 male + gasket	R07236
11 /10	Height adjuster + joint	R07233
13 / 14 / 15 / 16	2 1/2 union connections Ø 63 + adjusters Ø 50	W40RDU
22	Check valve 26/34	WCL03431
11 25	Cap kit 15/21	R06107
	Heat Line cover with sticker	WIB02695
E	20 kW TITANIUM tank without valve 26/34	WKITCUVE20KT
	40 kW TITANIUM tank without valve 26/34	WKITCUVE40KT
	70 kW TITANIUM tank without valve 26/34	WKITCUVE70KT
	Flat glove finger (non threaded) + pierced and joint	WKITDGT
	Cap 20/27 Female without hole	WNS01751
	Joint 20/27	WNS01780

* For all orders for spare parts please give the serial number of the exchanger.

Uranus +

Spare Parts

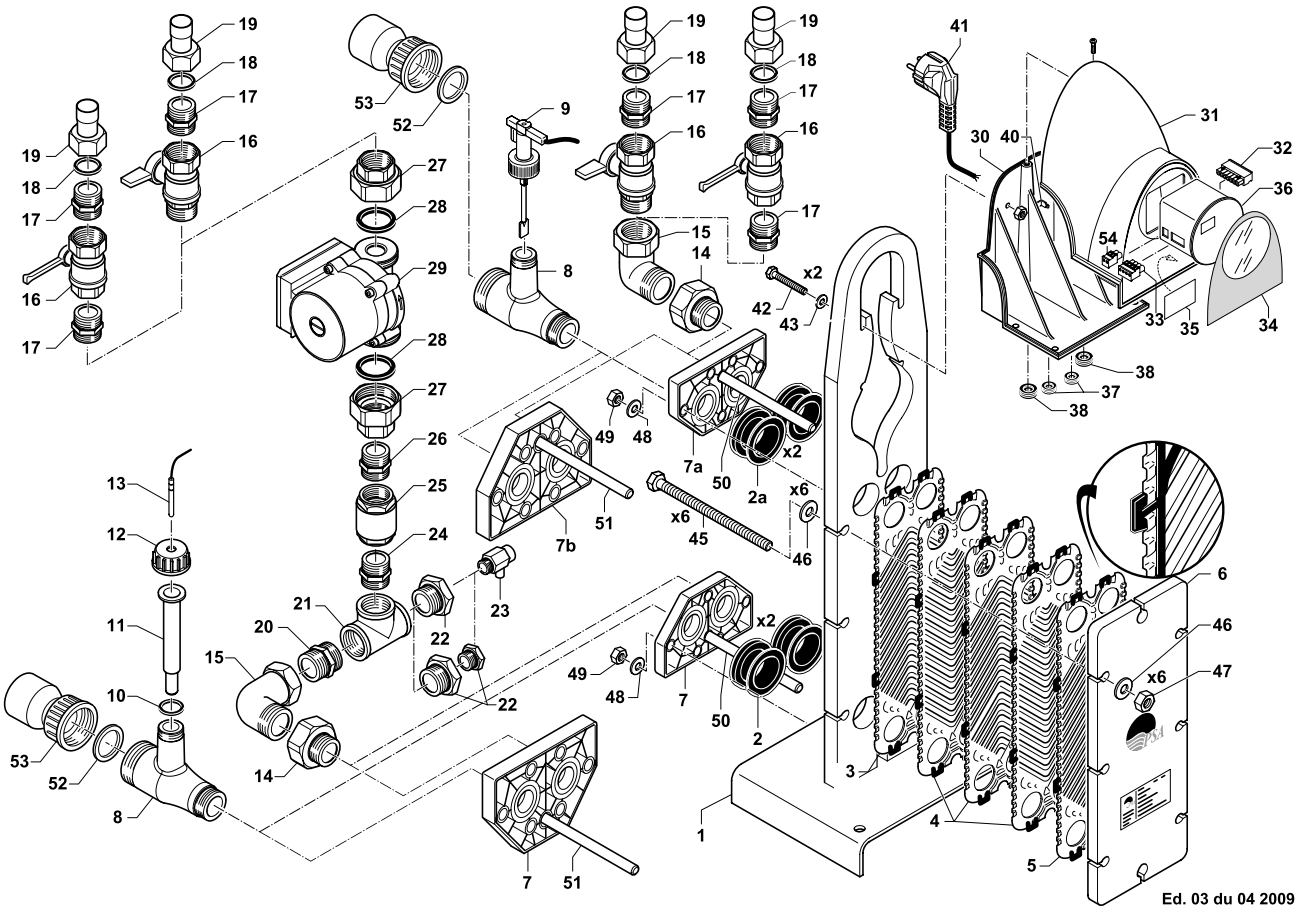

Ed. 03 du 04 2009

2

5

11

13

A

B

7

9

29

36

C

D

Position	Description	Reference
Electrical spare parts		
9	Noryl flow switch	WSK02022
13	Digital thermostat sensor PTC 100 (before 2015)	WCE01311
29	Circulator UP35/70 + Set of 2 connection pieces 26/34 and joints	R07120
	Circulator UAP35/70/120 + Set of 2 connection pieces 26/34 and joints (after 2015)	R07121
27 / 28	Set of 2 connection pieces 26/34 and joints	WGR01540
27 /28	Set of 2 connection pieces 33/42 and joints	WGR01541
36	ECP 200 Regulator** (or EVX 402)	WCE02684
34	Sticker for the electrical box front panel	WSR02735
A	Digital regulator ECP 230	WCE01308
B	Basic digital regulator FK 151	WCE02925
C	Digital thermostat transformer	WCE01305
D	Electric box with flow switch and sensor	W49COFUR
Plates UP35/70 & UAP35/70/120		
3	Titanium input plate T2*	WCV01183
Plates UP35/70 & UAP35/70/121		
4	Titanium intermediate plate T2*	WCV01185
Plates UP35/70 & UAP35/70/122		
5	Titanium output plate T2*	WCV01187
Plates UP120/240 & UAP240		
3	Titanium input plate M3*	WCV01184
Plates UP120/240 & UAP241		
4	Titanium intermediate plate M3*	WCV01186
Plates UP120/240 & UAP242		
5	Titanium output plate M3*	WCV01188
Plates UP 105 & 140		
3	Titanium input plate V4	WCV01178
Plates UP 105 & 141		
4	Intermediate plate V4	WCV01168
Plates UP 105 & 142		
5	Titanium output plate V4	WCV01181
Plates ECP or EC/PP 200		
3	Titanium input plate V8	WCV01179
Plates ECP or EC/PP 201		
4	Intermediate plate V8	WCV01170
Plates ECP or EC/PP 202		
5	Titanium output plate V8	WCV01182
Others		
2	Sleeve joint EPDM (UP 35/70)	WCV01171
	Sleeve joint EPDM (UP 120/240)	WCV01172
7	Plastic collar UP 35-70 + 2 x gaskets 24/31 + UAP 35-70-120	R07235
	Plastic collar UP 120-240 + 2 x gaskets 24/31 + UAP240	R07234
8	Condenser connection 7M without fixture (water outlet)	WIB01633
10 / 11 /12	Flat glove finger (non threaded) + pierced and joint 20/27	WKITDGT
12	Cap 20/27 Female without hole	WNS01751
10	Joint 20/27	WNS01780
25	Check valve 26/34	WCL03431
52 /53	Set of 2 half-union connectors + gaskets	W20RDU

* For all orders for spare parts please give the serial number of the exchanger.

Wall Mounted boilers

Spare Parts

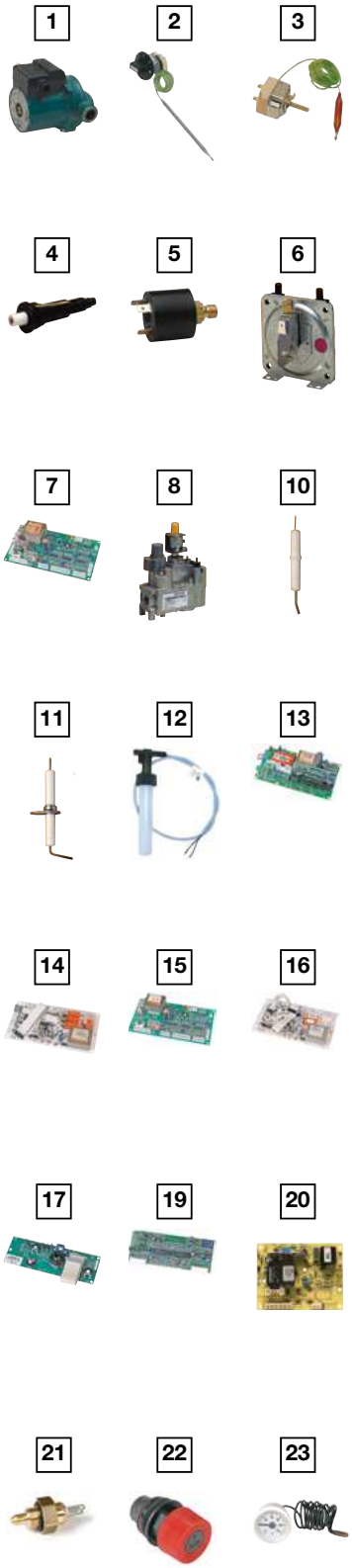

Position	Description	Reference
1	Circulator 20-70 6H (CM-CMV) before 2004	WUN02384
	Circulator (from 2004)	WUN03619
2	Regulation thermostat pool (model 93 and 94) B.6	WEG01405
3	Regulation thermostat pool (from 95) B.10	WEG01404
5	Water pressure switch (before 2004)	WUN02441
6	Smoke safety pressure switch (CMV 24)	WUN02432
7	Electronic plate (CMV24) before 2002	WUN02411
10	Piezo starter electrode	WUN02394
11	Starter/ionisation electrode	WUN02436
12	Noryl flow switch	WSK02022
13	Electric plate CMV from 2004	WUN03608
14	Electric plate (CMV) from 2002	WUN03041
15	Electronic plate (CM24) before 2002	WUN02410
16	Electric plate (CM) from 2002	WUN03061
17	Command plate (CMV) from 2004	WUN03606
	Electric plate (CM - CMV) from 2002	WUN03040
19	Lighter plate (CMV) from 2004	WUN03607
20	Electronic lighter plate	WUN02409
21	Primary circuit sensor (before 2004)	WUN02433
22	Safety valve head	WUN02420
23	Primary circuit thermometer for facade	WUN02440
24	Smoke safety thermostat (CM)	WUN02414
25	Electronic lighting gas vane (605 N VR4605N	WUN02425
26	Gas vane CMV from 2004 (845 SIGMA)	WUN03605
27	Pilot + support (CM)	WUN02417
	Pilot + support (CMV)	WUN02418
28	Primary circuit sensor (before 2004)	WUN03616
29	Lighter transformer (from 2004)	WUN03620
31	Primary circuit water manometer for facade	WUN02434
	90° concentric angle Ø 100	WUN02388
	1m concentric extension Ø 100	WUN02415
	Safety Klixon 105° C AE (before 2004)	WUN03060
	Safety Klixon 105° C for pilot	WUN02404
	Ventilator motor (CMV24)	WUN03062
	Protection basket	WUN02442
	Safety Klixon 105° C (before 2004)	WUN03618
	Automatic purger	WUN02438
	Remote relay 220 Volts	WCF02710
	Thermocouple	WUN02422
	Water pressure switch	WUN03617
	Boiler tank	WKITCUVE40KT
	Pool temperature sensor (from 2004)	WUN03610

Eurogaz Boilers

Position	Description	Reference
1	Circulator 20-27 12 M (EUROGAZ)	WUN03063
	Double circuit circulator 2m3 25/40	W49CC4
2	Heating sensor (before 2004)	WUN02433
3	Regulation thermostat B.10	WEG01404
4	Primary circuit thermometer for facade	WUN02440
5	Water pressure switch	WUN02441
6	Smoke safety pressure switch	WUN02432
7	Electronic plate before 2002	WUN02411
9	Lighter plate	WUN02431
10	Potentiometer heating regulation	WUN02412
11	Starter/ionisation electrode	WUN02436
12	Relay (220 V) 0006 double contacts	WCF02711
13	Remote relay 220 Volts triple contacts	WCF02710
14	Noryl flow switch	WSK02022
15	Safety Klixon 105° C AE (before 2004)	WUN03060
16	Primary circuit water manometer for facade	WUN02434
17	Electric plate (CMV) from 2002	WUN03041
	Switch on/off 2 positions	WUN02385
	Switch on/off 3 positions	WUN02386
	1m concentric extension Ø 100	WUN02415
	Protection basket	WUN02442
	Ventilator motor	WUN03066
	90° concentric angle Ø 100	WUN02388
	Automatic purger	WUN02438
	Safety valve head	WUN02420
	Expansion tank double circuit (4L)	WIS01648
	Burner safety rearming button	WUN02445
	Boiler tank	WKITCUVE40KT

1

2

3

4

5

6

7

8

9

10

11

12

13

14

15

16

17

Floor boilers C21, C31, C43, C54, C76, C8

Position	Description	Reference
1	Circulator 25/40 (C21, C31, C43, C54)	W49CC4
	Circulator 25/60 (C76, C8)	W49CC6
2	Manometer valve 15/21	WIS01651
4	Pilot gas vane (C54, C76, C8)	WUN02428
	Pilot gas vane (C21, C31, C43)	WUN02426
	Gas safety pressure switch (C76 C8)	WUN02439
6	Thermocouple	WUN02422
8	Safety Klixon (105°)	WUN02406
9	Primary thermostat 30/90°	WUN02423
	Expansion tank double circuit (4L)	WIS01648
	Piezo starter electrode	WUN02394
	Regulation thermostat bulb 6	WEG01405
	Lighter transformer (from 2004)	WUN03620

1

2

5

6

8

9

Floor boilers C22, C32, C42, C62, C72

Position	Description	Reference
1	Circulator 25/40 (C22, C32, C42)	W49CC4
	Circulator 25/60 (C72)	W49CC6
2	Manometer valve 15/21	WIS01651
	Pilot gas vane (C22, C32, C42)	WUN02426
6	Thermocouple	WUN02422
8	Safety Klixon (105°)	WUN02406
	Gas safety pressure switch (C72)	WUN02439
9	Primary thermostat 30/90°	WUN02423
10	Electronic lighter gas vane (C22, C32, C42) VK4105C	WUN02427
11	Electronic lighter plate (C22, C32, C42)	WUN02408
12	Electronic lighter electrode (C22, C32, C42, C62, C72)	WUN02392
	Ionisation electrode	WUN02435
	Piezo starter electrode	WUN02394
14	Smoke safety thermostat	WUN02437
15	Noryl flow switch	WSK02022
16	Klixon (105°) manual rearming	WUN02407
	Electronic lighter plate (C72)	WUN02409
19	Remote relay 220 Volts	WCF02710
20	Connection plate	WUN03621
29	Lighter transformer (from 2004)	WUN03620
	White plastic button	WUN02387
	Lighter plate C62	WUN03609
	Regulation thermostat B.10	WEG01404
	Pilot gas vane (C72) V4400C	WUN02428
	Expansion tank double circuit (4L)	WIS01648
	Boiler tank C32	WKITCUVE40KT
	C42 - C62 - C72 Boiler tank	W49CUVE70CG

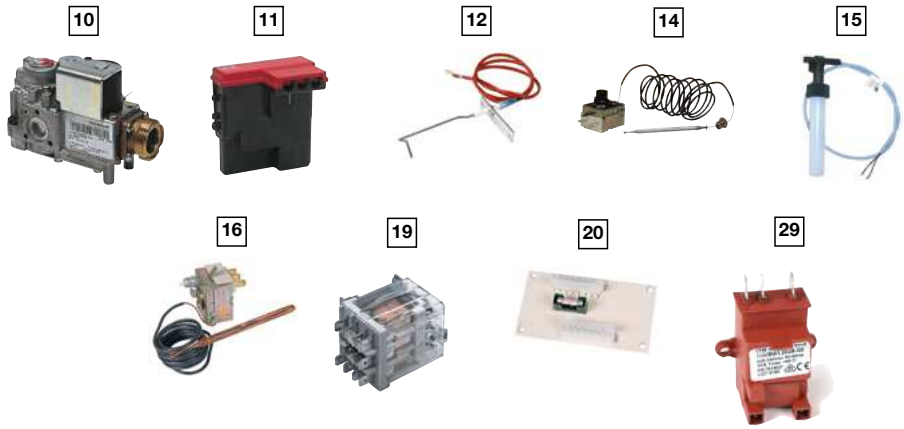

Sirocco & DT 850

Spare Parts

Sirocco 55, 80, 110

Model	Ambient	Throught-the-wall
55	8F + 1M	4F + 1M
80	10F + 1M	6F + 1M
110	12F + 1M	8F + 1M
F = Fixe ; M = Mobile + Fixe		

AMBIENT

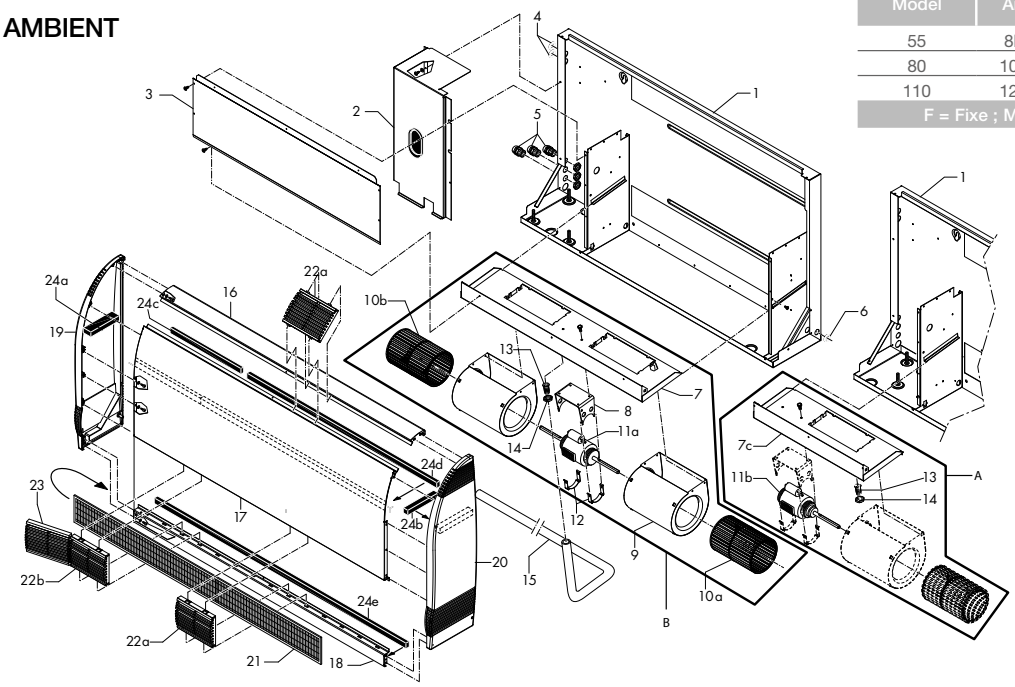

THROUGH-THE-WALL

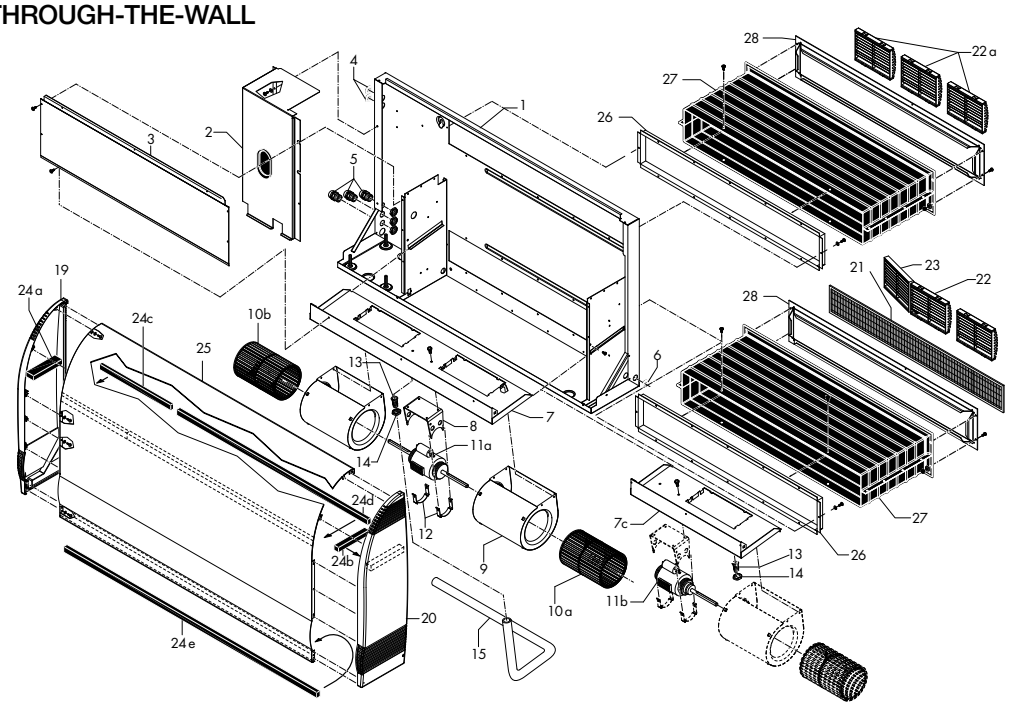

1

3

4

29

38

39

40

50

Sirocco 55, 80, 110

Position	Description	Reference
Electrical spare parts		
	Defrosting sensor (grey)	WCE01312
	Extraction sensor	WCE01311
	Resistance (electric heating option) - Sirocco 55 - 2KW	WEG01422
	Resistance (electric heating option) - Sirocco 80 - 3KW	WEG01423
	Resistance (electric heating option) - Sirocco 110 - 4,5kW	WEG01424
50	Regulator ECP 600	WCE06000
	Compresor Capacitor 25µf C2 (SIROCCO 55)	B0181300A
	Compresor alu Capacitor 35µf (SIROCCO 80)	B0181400A
	Compressor Capacitor 40 µF C2 (SIROCCO 110)	B0181500A
	Fan Capacitor 3µf (SIROCCO 55, 80, 110)	WSG01935
B	Ventilation set (SIROCCO 55)	WTC03074
	Ventilation set (SIROCCO 80)	WTC03075
	Ventilation set (SIROCCO 110)	WTC03076
C	Hygro control + sensor**	WD000001
	Hygro control sensor	WCE03431
D	Standard wall hygrostat	WCE01314
	Phase controller	WCZ01371
Refrigerating spare parts		
29	Compressor (SIROCCO 55) RK5512C single ph.	WTC03071
	Compressor (SIROCCO 80) Mitsubishi RE247VHSMT single ph.	WTC03080
	Compressor ZR22 single phase 407C 4 feet	WCO02576
	Compressor (SIROCCO 110) 3 ph.	WCO03848
38	Expansion valve TX3 N13 407C (SIROCCO 55)	WTC03070
	Expansion valve TX3 N34 407C (SIROCCO 80)	WAC02497
	Expansion valve TX3 N35 407C (SIROCCO 110)	WAC02498
39	HP Pressure switch* 20-26 B (to be screwed)	WJC01669
40	LP Pressure switch* 0.5/2 B (to be screwed)	WJC01668
	Dehumidifier 053S	WCY00995
Others		
21	Filter (SIROCCO 55 Ambient) Size 135 x 940 mm	WSD01913
	Filter (SIROCCO 80 Ambient) Size 135 x 1130 mm	WSD01914
	Filter (SIROCCO 110 Ambient) Size 135 x 1320 mm	WSD01915
	Filter (SIROCCO 55 Through-the-wall) Size 135 x 560 mm	WSD01911
	Filter (SIROCCO 80 Through-the-wall) Size 135 x 750 mm	WSD01912
	Filter (SIROCCO 110 Through-the-wall) Size 135 x 940 mm	WSD01913
22a	Fixed grate	WIB01637
22b / 23	Removable + fixed grate	WGRILSIROCO
	Manual overheating thermostat	WJP01682
	Automatic overheating thermostat	WJP01681
12	Motor fan mounting clip	WTC03893
	Through the wall kit Sirocco 55 (top and bottom)	WKITMANCH55
	Through the wall kit Sirocco 80 (top and bottom)	WKITMANCH80
	Through the wall kit Sirocco 110 (top and bottom)	WKITMANC110

C

D

DT 800, 850 et 850E

Position	Description	Reference
Electrical spare parts		
1	Fan motor DT 850 E	WAM01000
	Electronic card DT 850 E + Display DT 850 E	WAM01004
3	Defrosting clock 15.1	WAM00981
	Defrosting clock 14.1	WAM00990
	Compressor Capacitor 25µf	B0181300A
	Compressor Capacitor 40 µF C2	B0181500A
Refrigerating spare parts		
4	Compressor RG171JT (DT850)	WAM03080
	Compressor DT 850 E to R407C	WAM01001
	Compressor DT 850 E to R410A	WAM01002
Others		
	Fan Capacitor 2µF	WWA01051
	Turbine DT 850 E	WAM01003
	Turbine give the Type - DT800 or DT850	WAM03069
	Lexan DT 850 E	WAM01006
	Filter give the Type - DT800 or DT850 or DT850E	W28FIDT5

** The hygro-control can replace a hygrothermostat from the previous generation if the dehumidifier is fitted with an ECP600 regulator.

DF 403, 405, 408 GAINE

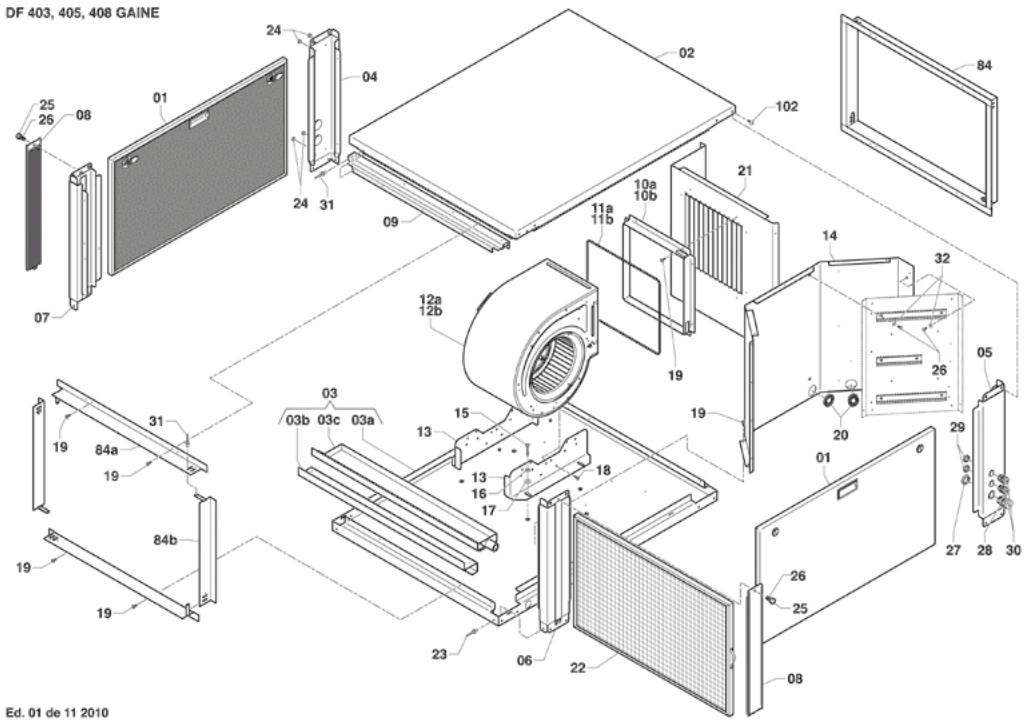

Ed. 01 de 11 2010

DF 403, 405, 408

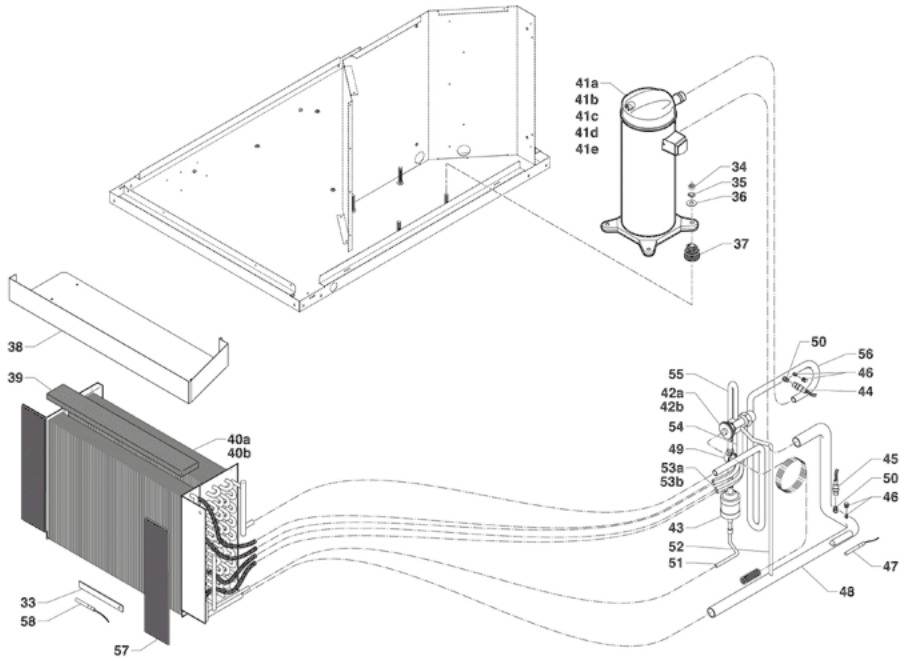

Ed. 01 de 11 2010

31

32

33

42

43

49

114

51

Position	Description	Reference
Electrical spare parts		
12	Motor fan (DF6, 303, 305, 403 ,405) - Condenser included***	WCF01220
	Motor fan (DF8, DF 308, 408) - Condenser included***	WCF01221
	Motor fan (DF10, 12, 310, 312, 410, 412) - Condenser included***	WCF01222
	Compressor alu Capacitor 45 µF (DF5, DF305, DF405)	B0181600A
	Compressor Capacitor 50µf (DF6)	B0181100A
	Compressor Capacitor 55µf (DF8, DF308, DF408)	B0181700A
	Compressor Capacitor 40 µF (DF303, DF403)	B0181500A
	Ventilator Capacitor 12µF (DF5, 6, 8 DF308, 310, 312, DF408, 410, 412)	WSG01931
	Ventilator Capacitor 10µF (DF303, 305, DF403, 405 and 408 IE3)	WSG01930
	Ventilator Capacitor 7µF IE2 standards from 2014 (DF403 and 405)	B0053100A
	Ventilator Capacitor 16µF IE2 standards from 2014 (DF410 and DF412)	B0053200A
	Fan Capacitor 4 µF (DF403 et 405)	WSG01938
49	Regulator ECP 600	WCE06000
51	Remote relay 12 Volts	WFD01460
	Remote relay 220 Volts	WCF02710
	Contactor DIL 17-10 Mono	WCF01113
	Contactor DIL 9-10 3 phase	WCF01066
	Phase controller (DF 3 phase)	WCZ01371
58	Extraction sensor (black)	WCE01311
47	Defrosting sensor (grey)	WCE01312
A	Standard wall hygrostat	WCE01314
B	Hygro control + sensor**	WD000001
	Hygro control sensor	WCE03431
C	Heater 1.5 kW (extra heating option)	WRI01892
D	Auto rearming safety thermostat	WIN01642
E	Manual rearming safety thermostat	WIN01646
F	Transformer 220/12V	WSE01929
	Defrosting clock 15.1	WAM00981
	Standard wall thermostat	WCL01318
Refrigerating spare parts		
40	Evaporator/condenser (DF 308, DF 408)	WHC01547
	Evaporator/condenser (DF 310, 312, 410, 412)	WHC01550
	Evaporator/condenser (DF 303, 305, 403, 405)	WHC01549
41	Compressor ZR22 single phase (DF 303, 403)	WCO02576
	Compressor ZR 28 single phase (DF5, DF 305 single phase, 405 single phase)	WCO02579
	Compressor ZR 28 tri (DF 305 Tri, 405 Tri)	WCO02783
	Compressor ZR 34 sing.ph. (DF 6 single phase)	WCO02581
	Compressor ZR 40 sing.ph. (DF 8, DF 308 single phase, 408 single phase)	WCO02590
	Compressor ZR 40 3 ph. (DF 8, DF 308 tri, 408 tri)	WCO02687
	ZR48 Compressor (DF 10, DF 410 tri)	WCO02589
	Compressor ZR61 3 ph. (DF 12, DF 312 3 phase, DF412)	WCO02453
42	Expansion valve TX3 N35 407C (DF 303, 403)	WAC02498
	Expansion valve TX3 N36 (DF 305, 308, 405, 408)	WAC02499
	Expansion valve TX3 N37 407C (DF 10, 310, 410)	WAC02500
	Expansion valve TX3 N38 407C (DF 12, 312, 412)	WAC02501
33	Liquid indicator 33S (DF 5, 6, 8, 303, 305, 308, 403, 405, 408)	WCY01000
	Liquid indicator 34S (DF 310/312, 10/12, 410, 412)	WCY01001
43	Dehumidifier 053S (DF 6/8, 303, 305, 308, 403, 405, 408)	WCY00995
	Dehumidifier 084S (DF 310/312/10/12/410/412)	WCY00997
45	LP Pressure switch* 0.5/2 B (to be screwed)	WJC01668
44	HP Pressure switch* 20-26 B (to be screwed)	WJC01669
Others		
3C	Condensation collector (DF 6/8, 305, 308, 405, 408)	WTP02123
	Condensation collector (DF 10/12, 310, 312, 410, 412)	WTP02127
22	Filter frame (DF ducts 303 to 308) size: 410 x 610 x 23 mm	WSD01918
	Filter frame (DF ducts 310 to 312) size: 450 x 645 x 23 mm until Nov. 2006	WSD01922
	Filter frame (DF ducts 310 to 312) size: 577 x 690 x 22 mm from Nov 2006	WSD03351
	Metalwork insulation thickness 20 mm - Price per m2	WCA02601
	Filter DF 403 to 408 size: 755 x 455 x 20 mm	WTL00760
	Filter DF 410 to 412 size: 850 x 580 x 20 mm	WTL00761
	Demi filter DF 403-408 size: 380 x 460 x 22 mm	WTL00763
	Demi filter DF 410-412 size: 428 x 585 x 22 mm	WTL00762

A

B

C

D

E

F

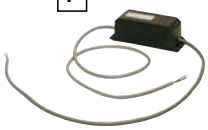

** The hygro-control can replace a hygrothermostat from the previous generation if the dehumidifier is fitted with an ECP600 regulator.
*** Pour toute commande de moteur ventilateur de DF merci de nous préciser le modèle exact du DF et son numéro de série.

BODY SET

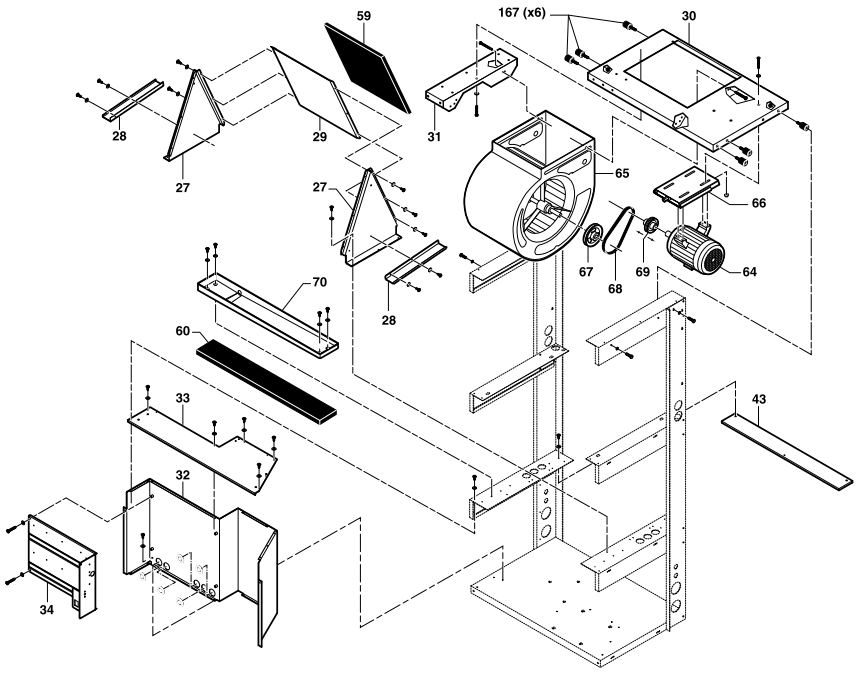

REFRIGERATING AND ELECTRIC SET

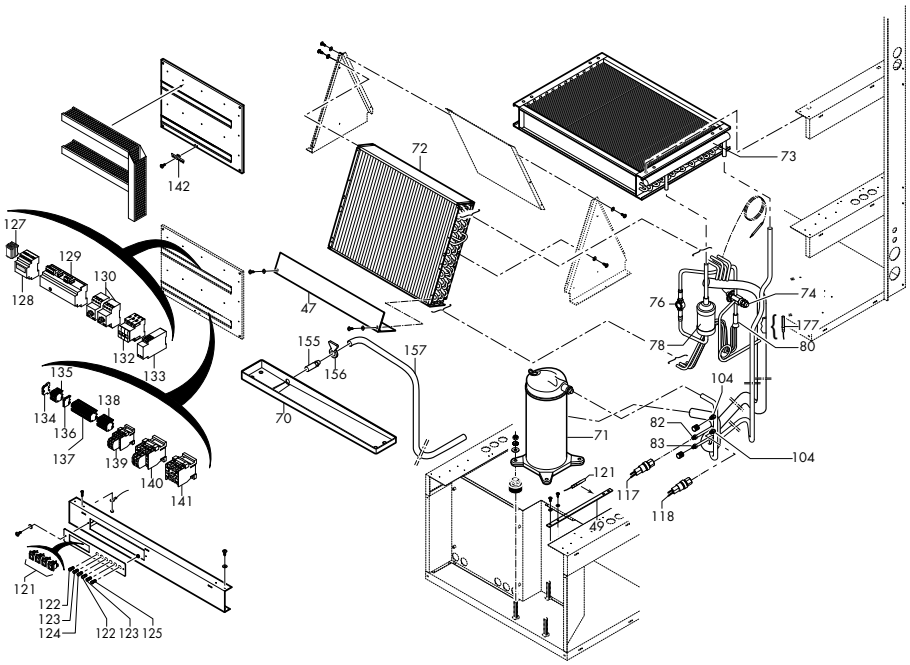

64

71

68

74

76

117

118

127

129

130

133

Position	Description	Reference
Electrical spare parts		
64	Ventilation motor (CAE 506 and 508 sing.ph.)	WLS01688
	Ventilation motor (CAE 310, 507, 508 three ph.)	WLS01689A
	Ventilation motor (CAE 517, 510 3 ph.)	WLS01690A
	Ventilation motor (CAE 722, 513 three ph.)	WLS01691B
123	Green light	WSX03024
121	On/Off switch, green light	WSX02010
	Extraction sensor	WCE01311
127	Remote relay 220 Volts	WCF02710
	Remote relay 12 Volts	WFD01460
128	Digital regulator EC 6 133 with sensor (condenser option)	WCE02685
129	Regulator ECP 600	WCE06000
130	Thermal circuit breaker PKZMO 16 A	WCF01078
	Thermal circuit breaker PKZMO 2.5A	WCF01074
	Thermal circuit breaker PKZMO 4 A	WCF01075
	Thermal circuit breaker PKZMO 6.3 A	WCF01073
133	Phase controller	WCZ01371
177	Defrosting sensor (grey)	WCE01312
	Compressor Capacitor 50µf (CAE 506)	B0181100A
	Compressor Capacitor 55µf (CAE 508)	B0181700A
B	Standard wall hygrostat	WCE01314
C	Hygro control + sensor**	WD000001
	Hygro control sensor	WCE03431
D	Static timer 180S	WCZ01370
F	Transformer 220/12V	WSE01929
G	Extractor thermostat (condenser option)	WIN01644
H	Auto rearming safety thermostat	WIN01642
I	Manual rearming safety thermostat	WIN01646
	Contactor DILM 9-10	WCF01066
	Heater 1.5 kW (extra heating option)	WRI01892
	Standard wall thermostat	WCL01318
	Hygro+Temp Regulator for remote cabinet	B0202000A
	Hygro+Temp sensor for remote cabinet	B0201900A
Refrigerating spare parts		
71	Compressor ZR 34 sing.ph. (CAE 506)	WCO02581
	Compressor ZR 40 sing.ph. (CAE 508)	WCO02590
	Compressor ZR 40 3 ph. (CAE 507, 508)	WCO02687
	Compressor ZR61 3 ph. (CAE 510)	WCO02453
	Compressor ZR81 3 ph. (CAE 513)	WCO02688
74	Expansion valve TX3 N36 (CAE 506)	WAC02499
	Expansion valve TX3 N37 (CAE 508)	WAC02500
	Expansion valve TX3 N38 (CAE 510)	WAC02501
	Expansion valve TX3 N39 (CAE 513)	WAC02753
76	Liquid indicator 33S (CAE 506, 508)	WCY01000
	Liquid indicator 34S (CAE 510, 513)	WCY01001
78	Dehydrator 083S (CAE 506, 598)	WCY00996
	Dehydrator 164S (CAE 510, 513)	WCY00998
117	LP Pressure switch* 0.5/2 B (to be screwed)	WJC01668
118	HP Pressure switch* 20-26 B (to be screwed)	WJC01669
Others		
65	Turbine (CAE 506, 508)	WNI01742
	Turbine (CAE 510, 513)	WNI01743
	Turbine bearing (CAE 506, 508)	R06217
	Turbine bearing (CAE 510, 513)	R06218
68	Ventilation belt (CAE 517, 722*)	WRS01894
	Ventilation Belt (CAE 310, 506, 507, 508, 510, 513*)	WGA02968
70	Condensation collector*	WTP02122
	Ambient filter frame (CAE 506, 507, 508, 510, 513*)	WSD01908
	Rear filter frame (CAE 506, 507, 508, 510, 513*)	WSD01910
	Side filter frame (CAE 506, 507, 508, 510, 513*)	WSD01909
	Bumpy foam insulation (plate dimensions 1,50 m x 1,00 m)	WCA02600
	Filtering medium without frame (CAE 310, 517, 722*)	WTC03077
167	Silent block M/F motor fan bracket	WGA02946

A

B

C

D

E

F

G

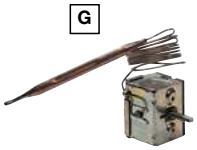

H

I

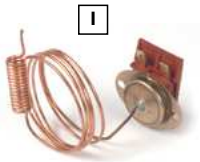

** The hygro-control can replace a hygrothermostat from the previous generation if the dehumidifier is fitted with an ECP600 regulator.

Repère	Description	Référence
Electrical spare parts		
6	Regulator ECP 600	WCE06000
7	Thermal circuit breaker PKZMO 16 A	WCF01078
	Thermal circuit breaker PKZMO 20 A	WCF01079
	Thermal circuit breaker PKZMO 4 A	WCF01075
	Thermal circuit breaker PKZMO 6.3 A	WCF01073
8	Remote relay 12 Volts	WFD01460
9	Remote relay 220 Volts	WCF02710
	Phase controller	WCZ01371
10	Ventilator motor 1.1 kW (OMEGA 10)	WLS01691B
11	Ventilator motor 1.5 kW (OMEGA 14)	WLS01695A
	Ventilator motor 1.8 kW (OMEGA 16)	WLS01697B
	Ventilator motor 2.2 kW (OMEGA 20, 28)	WLS01698A
12	Auto rearming safety thermostat	WIN01642
	Manual rearming safety thermostat	WIN01646
13	Standard wall hygrostat	WCE01314
14	Hygro control + sensor**	WD000001
15	Hygro control sensor	WCE03431
	Extractor thermostat (condenser option)	WIN01644
16	Transformer 220/12V	WSE01929
17	Contactor DILM 9-10	WCF01066
	Digital regulator EC 6 133 with sensor (condenser option)	WCE02685
	Heater 1.5 kW (extra heating option)	WRI01892
	Static timer 180S	WCZ01370
	Standard wall thermostat	WCL01318
	Defrosting sensor (grey)	WCE01312
	Extraction sensor	WCE01311
	Hygro+Temp sensor for remote cabinet	B0201900A
	Hygro+Temp Regulator for remote cabinet	B0202000A

1

2

3

4

5

6

7

Repère	Description	Référence
Refrigerating spare parts		
1	Compressor ZR61 3 ph. (OMEGA 10)	WCO02453
	Compressor ZR72 3 ph. (OMEGA 14)	WCO02858
	Compressor ZR81 3 ph. (OMEGA 16)	WCO02688
	Compressor ZR 94 (OMEGA 20, after 2008)	WCO03830
	Compressor ZR12 M3 (OMEGA 28)	WCO03078
	Compressor ZR 125 (OMEGA 28)	WCO03831
2	Expansion valve TX3 N38 (OMEGA 10)	WAC02501
	Expansion valve TX3 N39 (OMEGA 14/16)	WAC02753
	Expansion valve TX7N15 (OMEGA 20 and 28)	WAC02961
3	Liquid indicator 34S (OMEGA 10 to 16)	WCY01001
	Liquid indicator 35S (OMEGA 20)	WCY01002
4	HP Pressure switch* 20-26 B (to be screwed)	WJC01669
5	LP Pressure switch* 0.5/2 B (to be screwed)	WJC01668
	Dehydrator 164S (OMEGA 10, 14, 16)	WCY00998
	Dehydrator 305S (OMEGA 20 and 28)	WCY00999
Others		
18	Ventilation Belt (OMEGA 10 a 16)	WGA02968
	Belt (OMEGA 20)	WGA02969
	Belt* (OMEGA 28) x2 (from 2006) XPZ 710	WTR02356
	Belt* (OMEGA 28) x2 (from 2007) XPZ 780	WTR02357
	Filter frame (OMEGA 10, 14, 16, 20) size: 525 x 615 x 23 mm to order per 2	WSD01916
	Omega filter 8/12 size: 625 x 400 x 23 mm by unit	WSD01923
	OMEGA 28* filter (until 2005) size: 500 x 400 x 23 mm to order per 6	WSD02760
	Filter OMEGA 28* (from 2006) size: 547 x 400 x 22 mm to order per 6	WSD03350
	Bumpy foam insulation (plate dimensions 1,50 m x 1,00 m)	WCA02600
	Metalwork insulation thickness 20 mm - Price per m2	WCA02601
	Turbine (OMEGA 10 to 20)	WNI01743
	Double Turbine OMEGA 28	WNI01755
	Turbine bearing OMEGA	R06218

* For all orders for spare parts please give the serial number of the dehumidifier.
** The hygro-control can replace a hygrothermostat from the previous generation if the dehumidifier is fitted with an ECP600 regulator.

8

9

10

11

12

13

14

15

16

17

18

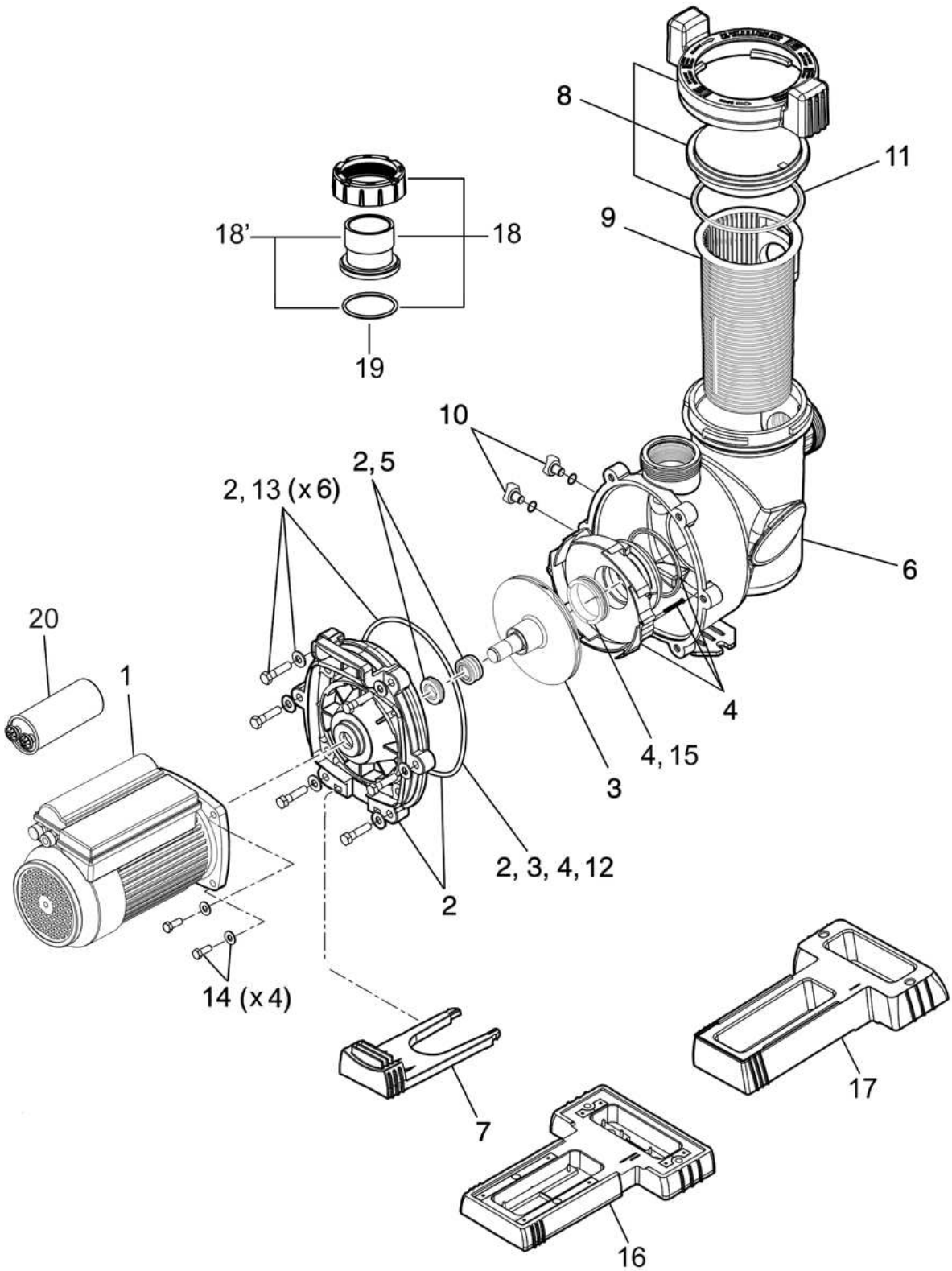
8
11
9
18'
18
19
10
2, 5
2, 13 (x 6)
6
20
1
4
4, 15
3
2, 3, 4, 12
2
14 (x 4)
7
17
16

Position	Description	Reference
1	Pump motor FHP 50M & 75M	R0770601
	Pump motor FHP 75T	R0770602
	Pump motor FHP 100M	R0770603
	Pump motor FHP 100T	R0770604
	Pump motor FHP 150M	R0770605
	Pump motor FHP 150M	R0770606
	Pump motor FHP 200M	R0770607
	Pump motor FHP 200T	R0770608
2	Backplate kit FHP (with hardware, Oring & mechanical seal)	R0479501
3	Impeller FHP 50 (w/ backplate Oring)	R0757700
	Impeller FHP 75 (w/ backplate Oring)	R0757800
	Impeller FHP 100 (w/ backplate Oring)	R0757900
	Impeller FHP 150 (w/ backplate Oring)	R0758000
	Impeller FHP 200 (w/ backplate Oring)	R0758100
4	Diffuser FHP (with Oring, Hardware & Backplate Oring)	W0479700
5	Mechanical seal FHP (set)	R0728500
6	Pump body FHP	R0479801
7	Motor mounting foot FHP 100M, 150M, 200M, 150T, 200T	R0479901
	Motor mounting foot FHP 75T & 100T	R0479904
	Motor mounting foot FHP 50M & 75M	R0479905
8	Lid FHP (with locking ring & Oring)	R0480001
9	Filter basket FHP	R0480101
10	Drain plug with Oring (set of 2)	R0446001
11	Lid Oring	R0480201
12	Backplate Oring FHP	R0480301
13	Backplate Hardware (bolts, washers & backplate Oring)	R0480501
14	Motor bolts & washers	R0446702
15	FHP slip ring	R0746800
16	Small pump base	R0486701
17	Large pump base	R0546401
18	63/50mm union tailpiece kit (x2)	R0728700
18’	2” UK union tailpiece kit (x2, without locking rings)	R0792700
19	Tailpiece Oring kit (x2)	R0728800
20	Condenser 12µF FHP 50M & 75M	R0792300
	Condenser 25µF FHP 100M	R0792400
	Condenser 35µF FHP 150M	R0792500
	Condenser 45µF FHP 200M	R0792600
/	2”-1.5” threaded reducer for retrofit	71840

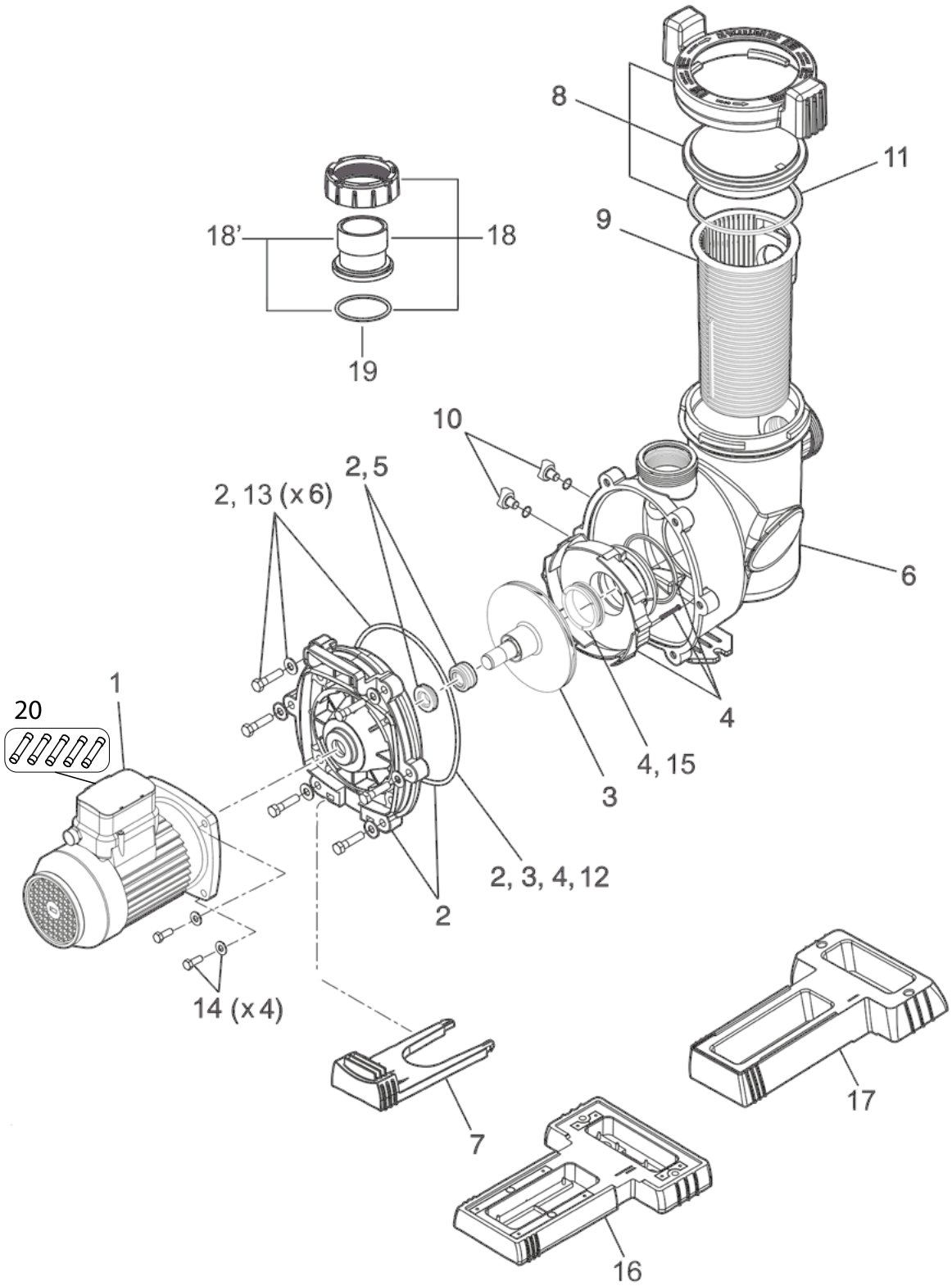
8
11
9
18'
18
19
10
2, 5
2, 13 (x 6)
6
1
20
4
4, 15
3
2, 3, 4, 12
2
14 (x 4)
7
17
16

Position	Description	Reference
1	Pump motor assembly, FloPro e3 100	R0728200
2	Backplate kit FHP (with hardware, Oring & mechanical seal)	R0479501
3	Impeller FHP 100 (w/ backplate Oring)	R0757900
4	Diffuser FHP (with Oring, Hardware & Backplate Oring)	W0479700
5	Mechanical seal FHP (set)	R0728500
6	Pump body FHP	R0479801
7	Motor mounting foot FHP 100M, 150M, 200M, 150T, 200T	R0479901
8	Lid FHP (with locking ring & Oring)	R0480001
9	Filter basket FHP	R0480101
10	Drain plug with Oring (set of 2)	R0446001
11	Lid Oring	R0480201
12	Backplate Oring FHP	R0480301
13	Backplate Hardware (bolts, washers & backplate Oring)	R0480501
14	Motor bolts & washers	R0446702
15	FHP slip ring	R0746800
16	Small pump base	R0486701
17	Large pump base	R0546401
18	63/50mm union tailpiece kit (x2)	R0728700
18’	2” UK union tailpiece kit (x2, without locking rings)	R0792700
19	Tailpiece Oring kit (x2)	R0728800
20	10A fuse (x5)	R0855700
/	2”-1.5” threaded reducer for retrofit	71840

FloPro™ VS & FloPro™ VS AUT

Spare Parts

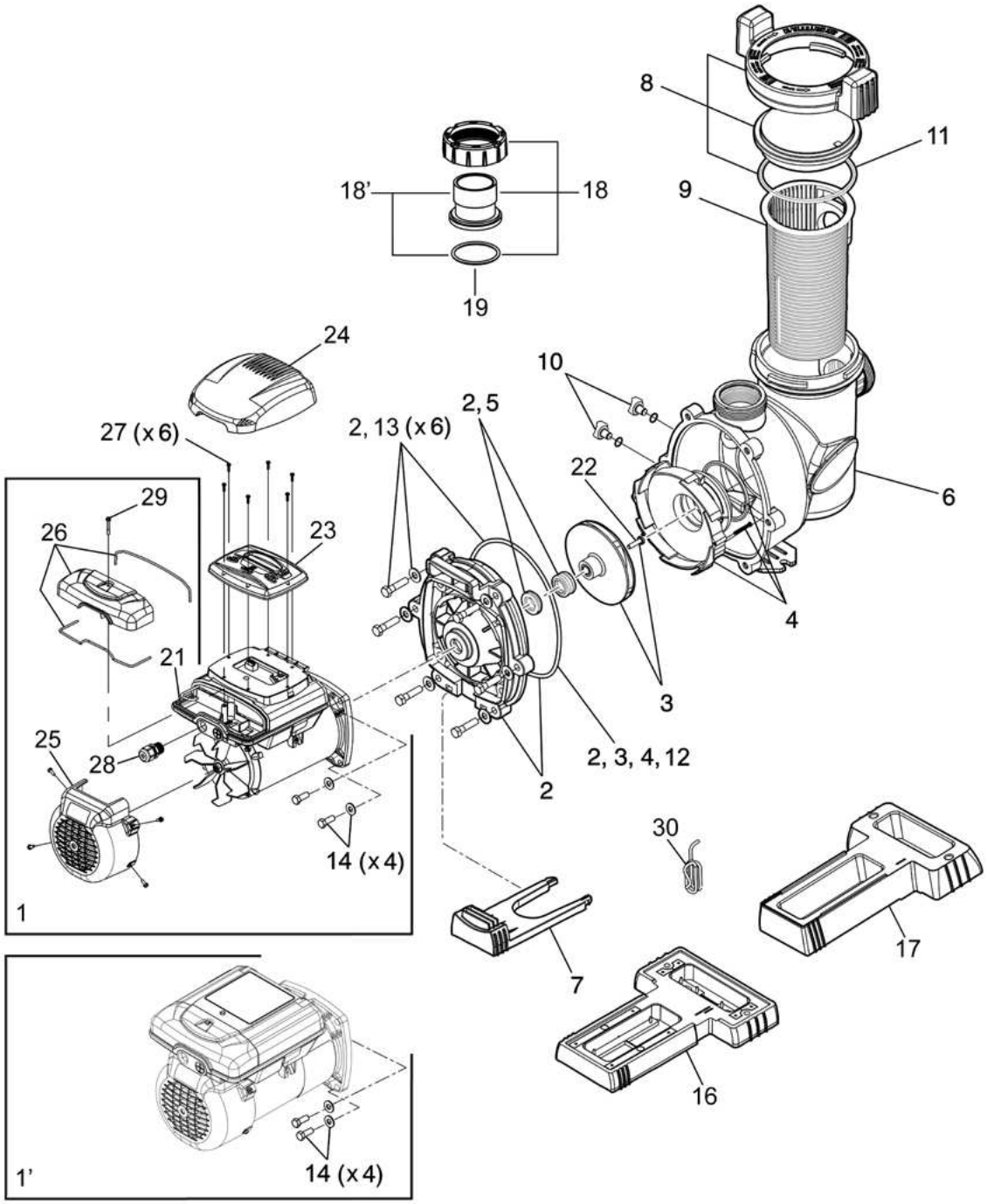

Position	Description	Reference
1	Pump motor, 50Hz FloPro VS 160	R0626500
1’	Pump motor, 50Hz FloPro VS AUT 160	R0773200
2	Backplate kit FHPVS (with hardware, Oring & mechanical seal)	R0479502
3	Impeller FloPro VS (with screw & Oring)	R0479603
4	Diffuser FloPro VS (with Oring, Hardware & Backplate Oring)	R0479701
5	Mechanical seal FloPro VS (set)	R0479400
6	Pump body FHP	R0479801
7	Motor mounting foot	R0479902
8	Lid FHP (with locking ring & Oring)	R0480001
9	Filter basket FHP	R0480101
10	Drain plug with Oring (set of 2)	R0446001
11	Lid Oring	R0480201
12	Backplate Oring FHP	R0480301
13	Backplate Hardware (bolts, washers & backplate Oring)	R0480501
14	Motor bolts & washers	R0446702
16	Small pump base	R0486701
17	Large pump base	R0546401
18	63/50mm union tailpiece kit (x2)	R0728700
18’	2” UK union tailpiece kit (x2, without locking rings)	R0792700
19	Tailpiece Oring kit (x2)	R0728800
21	4-Pin RS485 connector	R0660900
22	Impeller screw (with Oring)	R0515400
23	JEP-R user interface	WJEP-R
24	User interface cover FloPro VS	R0571501
25	Fan cover FloPro VS	R0571300
26	Electrical connection box cover FloPro VS	R0571400
27	User interface screws	R0571600
28	Cable gland 6-12 mm x 1/2”	R0501101
29	Electrical connection box screw	R0587600
30	RS485 cable - 30 m	R0809300
/	2”-1.5” threaded reducer for retrofit	71840

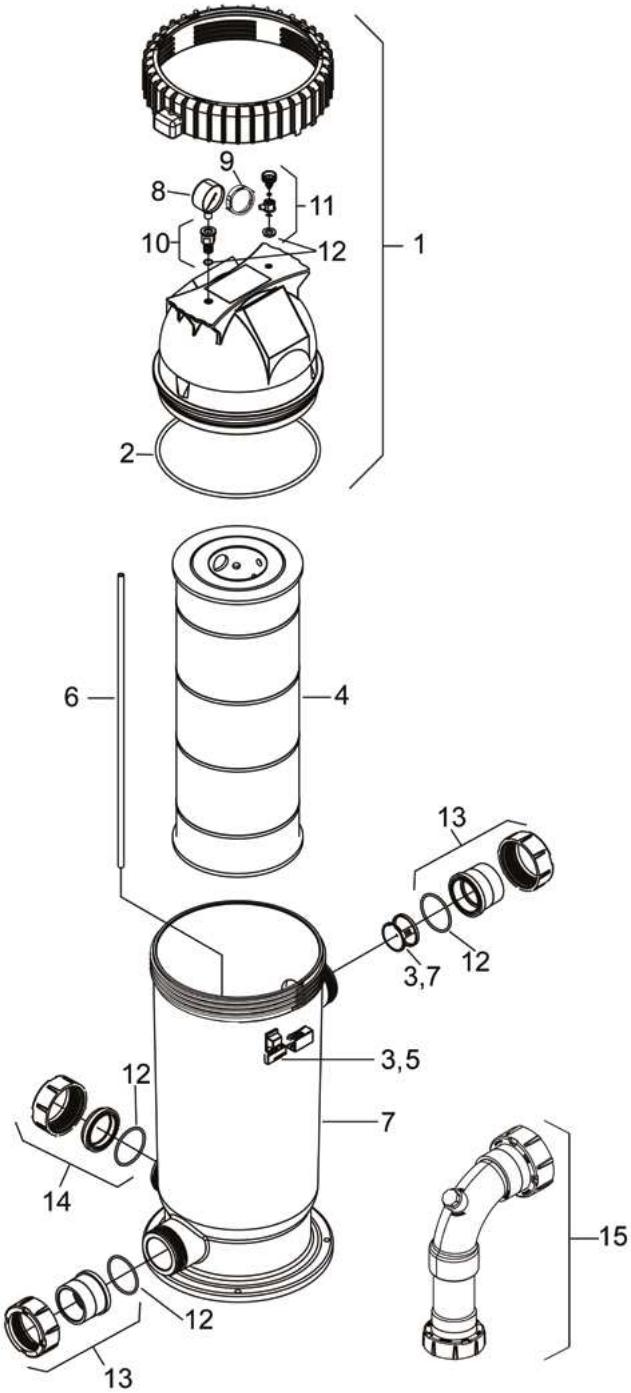
9
8
11
10
12
1
2
6
4
13
3,7
12
3,5
12
7
14
15
12
13

Position	Description	Reference
1	Top housing assembly, CS100 & CS150	R0461901
2	Tank Oring	R0462701
3	Inlet diffuser & locking tab kit	R0462101
4	Replacement cartridge, CS100	R0462201
	Replacement cartridge, CS150	R0462301
5	Locking tab	R0484101
6	Breather tube, CS100 & CS150	R0462803
7	Bottom housing assembly, CS	R0462901
8	Pressure gauge, bar-psi	R0756000
9	Indicator snap ring	R0468201
10	Pressure gaude adapter assembly	R0557101
11	Air relief valve assembly	R0557201
12	Oring set (x3)	R0466301
13	63/50mm union tailpiece kit (x2)	R0771400
	2” union tailpiece kit (2 pieces, add 2x R0770300 for 1 ½”)	R0771401
14	Drain cap kit	R0523000
15	Versa Plumb® kit for installation with a FloPro™ pump	WF000026

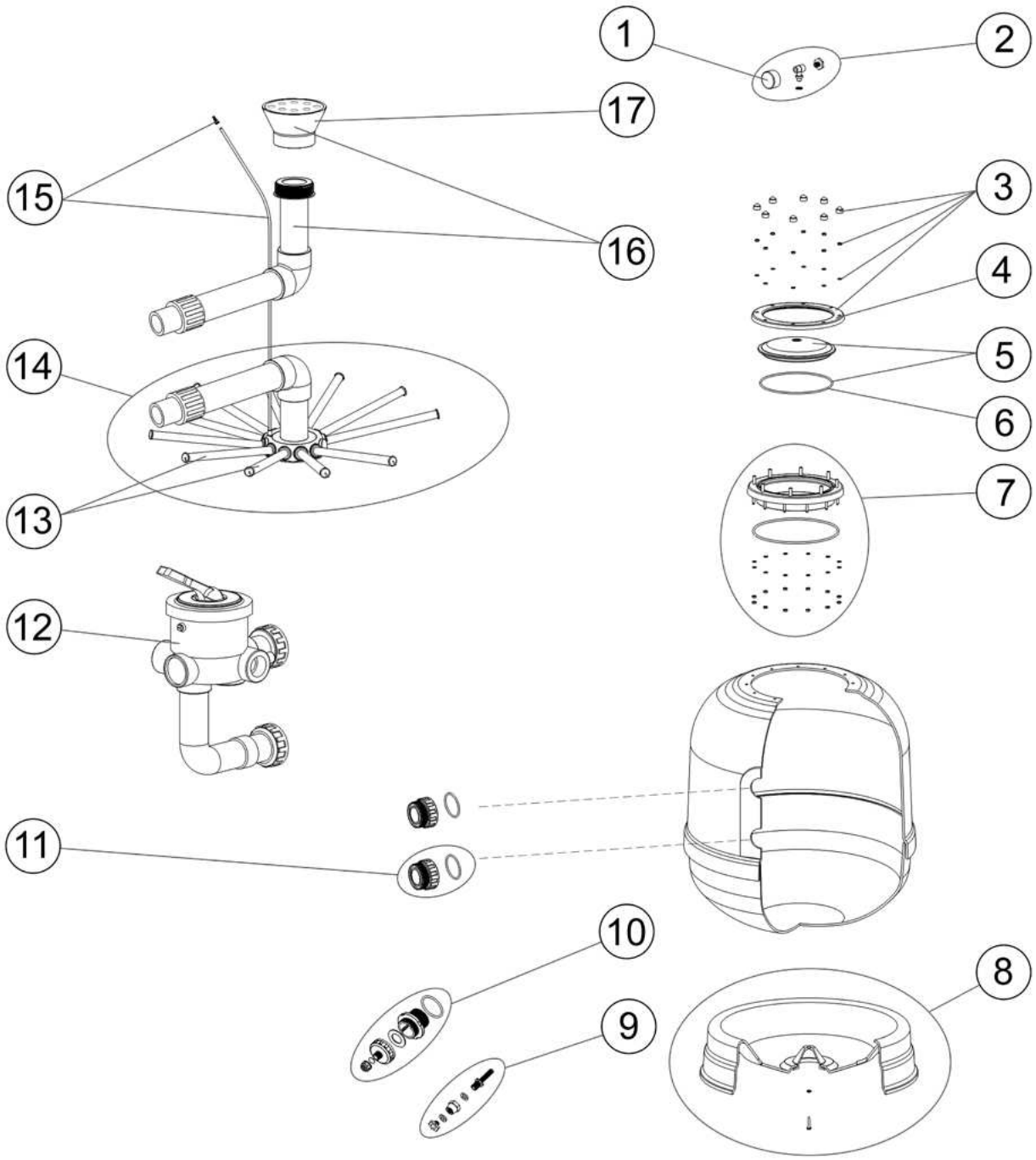
1
2
17
15
16
3
4
5
6
14
7
13
12
11
10
8
9

Position	Description	Reference
1	Pressure gauge 1/8”	R0831200
2	Complete pressure gauge kit (with T-shape adaptor, seal & air relief)	R0831100
3	Lid collar and nuts kit	R0831300
4	Lid collar	R0831600
5	Transparent lid + Oring kit	R0831500
	Black lid + Oring	R0842400
6	Lid Oring	R0831400
7	20-bolts neck ring kit	R0831700
8	Filter base D470/530	R0831800
	Filter base D650	R0832000
	Filter base D800	R0832100
	Filter base D950	R0832200
9	Water drain 3/8”	R0832300
10	Sand & water double drain	R0832400
11	2” fitting + Oring	R0832600
	1 ½” fitting + Oring	R0832500
12	1 ½” Classic multiport valve kit (with plumbing)	09758
	2” Classic multiport valve kit (with plumbing)	14904
13	Manifold arms assembly D470/530	R0835200
	Manifold arms assembly D650	R0835300
	Manifold arms assembly D800	R0835400
	Manifold arms assembly D950	R0835500
14	Manifold assembly kit D470	R0832900
	Manifold assembly kit D530	R0833000
	Manifold assembly kit D650	R0833100
	Manifold assembly kit D800	R0833200
	Manifold assembly kit D950	R0833300
15	Air purge + 670mm pipe kit D470>800	R0835600
	Air purge + 845mm pipe kit D950	R0835700
16	Diffuser assembly kit D470	R0833900
	Diffuser assembly kit D530	R0834000
	Diffuser assembly kit D650	R0834100
	Diffuser assembly kit D800	R0834200
	Diffuser assembly kit D950	R0834300
17	Cone diffuser D50mm D470>650	R0833700
	Cone diffuser D63mm D800>950	R0833800

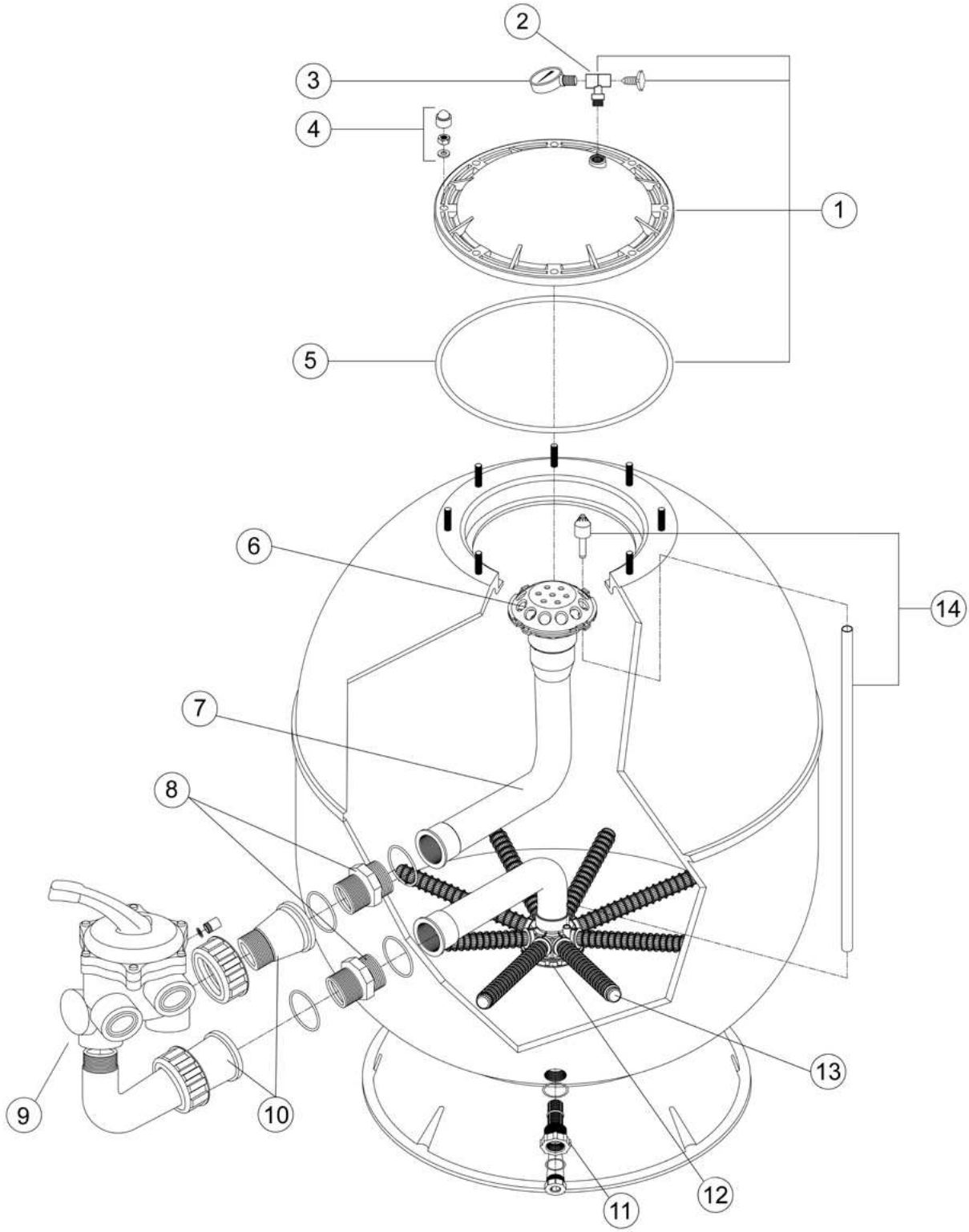
1
2
3
4
5
6
7
8
9
10
11
12
13
14

Position	Description	Reference
1	Lid set	R0804600
2	T-shape adaptor + seal + air relief kit	R0804900
3	Pressure gauge 3 bar	R0596500
4	Screws & caps set	R0674100
5	Lid Oring kit (x5)	R0805000
6	Diffuser	R0674400
7	D400 Diffuser elbow	R0674500
	D520 Diffuser elbow	R0597400
	D640 Diffuser elbow	R0597500
	D760 Diffuser elbow	R0597600
	D900 Diffuser elbow	R0597700
8	1 ½” threaded union set	R0598200
	2” threaded union set	R0598300
9	7-way multiport valve 1 ½”	R0596300
	7-way multiport valve 2”	R0596400
10	1 ½” union piping set	R0596900
	2” union piping set	R0597000
11	Drain plug set	R0596800
12	D400 Collector elbow	R0674600
	D520 Collector elbow	R0597800
	D640 Collector elbow	R0597900
	D760 Collector elbow	R0598000
	D900 Collector elbow	R0598100
13	Laterals 400	R0674700
	Laterals 520	R0597100
	Laterals 640	R0597200
	Laterals 760	R0804700
	Laterals 900	R0597300
14	Air relief tube & nozzle	R0804800

pH Expert / pH Perfect

Spare Parts

Position	Description	Reference
1	One way valve	W013001
2	pH Buffer solution kit (6x pH 4 and 6x pH 7)	R0824400
3	pH sensor S-B with 5 m BNC cable - before 2019	W013048
3’	Sensor holder and pH sensor P19 with 3 m BNC cable kit - starting 2019	R0868700
4	Peristaltic tube complete (with connections)	W013004
5	500 mA T fuse	W013005
6	Peristaltic pump tablet holder	W013007
7	Complete anti-emission suction pipe (with cable & tube)	W013008
8	Polyethylene correcting fluid injector tube 4x6 mm (5 meters)	R0748200
9	Complete DN50 mm saddle clamp (adaptable to 1 ½ ‘’ UK)	W013010
	Complete DN63 mm saddle clamp (adaptable to 2 ‘’ UK) - not included in the product	W013011
10	PVC adapter for injection valve	W013015
11	Reinforced sensor holder	W013016
	Sensor holder P19 - starting 2019	R0824600
\	Headless stainless steel screw for power pack hinge	W013020
12	pH Expert / pH Perfect electronic card with blue LCD display (> 2008)*	W013022
	pH Expert / pH Perfect with Led electronic card (< 2008)	W013012
	Filtration interface electronic card (pH Perfect with Led, < 2008)	W013013
\	Control panel sticker pH Expert	R0594700
	Control panel sticker pH Perfect / thin ribbon cable (≥ 05/2011)	W013038
	Empty pH Expert box (front face + rear face only)	R0594900
	Empty pH Perfect box (front face + rear face only, ≥ 2008)	W013024
13	Complete peristaltic pump motor 1,5 L/h (with casing, ≥ 2008)	W013026
	Complete peristaltic pump motor 1,5 L/h (with casing, < 2008)	W013014
14	Peristaltic pump protective casing pH Expert	R0595000
	Peristaltic pump protective casing pH Perfect (≥ 2008)	W013029
15	Stirrup wall-mount kit (stirrup + 2 screws + 2 plugs)	W521131
	Stirrup wall-mount kit for casing (stirrup + 2 screws)	W013036
\	POD Kit	R0534900

* : Control panel sticker replacement with a «thin ribbon cable» model (W013038) is needed if manufacturing date of the unit is below May 2011 (serial nr. < 1120Gxxxxxx).

Chlor Expert / Chlor Perfect

Spare Parts

Position	Description	Reference
1	One way valve	W013001
2	ORP buffer solution kit (6x 470 mV)	R0824500
3	ORP sensor S-B with 5 m BNC cable - before 2019	W013047
3’	Sensor holder and ORP sensor P19 with 3 m BNC cable kit - starting 2019	R0868800
4	Peristaltic tube complete (with connections)	W013004
5	500 mA T fuse	W013005
6	Peristaltic pump tablet holder	W013007
7	Complete anti-emission suction pipe (with cable & tube)	W013008
8	Polyethylene correcting fluid injector tube 4x6 mm (5 meters)	R0748200
9	Complete DN50 mm saddle clamp (adaptable to 1 ½ ‘’ UK)	W013010
	Complete DN63 mm saddle clamp (adaptable to 2 ‘’ UK) - not included in the product	W013011
10	PVC adapter for injection valve	W013015
11	Reinforced sensor holder	W013016
	Sensor holder P19 - starting 2019	R0824600
\	Headless stainless steel screw for power pack hinge	W013020
12	Chlor Perfect electronic card with orange LCD screen	W013032
\	Chlor Expert control panel sticker	R0594800
	Chlor Perfect control panel sticker (from 2012)	W013033
	Empty pH Expert box (front face + rear face only)	R0594900
	Empty pH Perfect box (front face + rear face only, ≥ 2008)	W013024
13	Complete peristaltic pump motor 1,5 L/h (with casing, ≥ 2008)	W013026
	Complete peristaltic pump motor 5 L/h (with casing)*	W013034
14	Peristaltic pump protective casing pH Expert	R0595000
	Peristaltic pump protective casing pH Perfect (≥ 2008)	W013029
15	Stirrup wall-mount kit (stirrup + 2 screws + 2 plugs)	W521131
	Stirrup wall-mount kit for casing (stirrup + 2 screws)	W013036
\	POD Kit	R0534900

* : 5 L/h motor is only dedicated to use in big pools (> 100 m3).

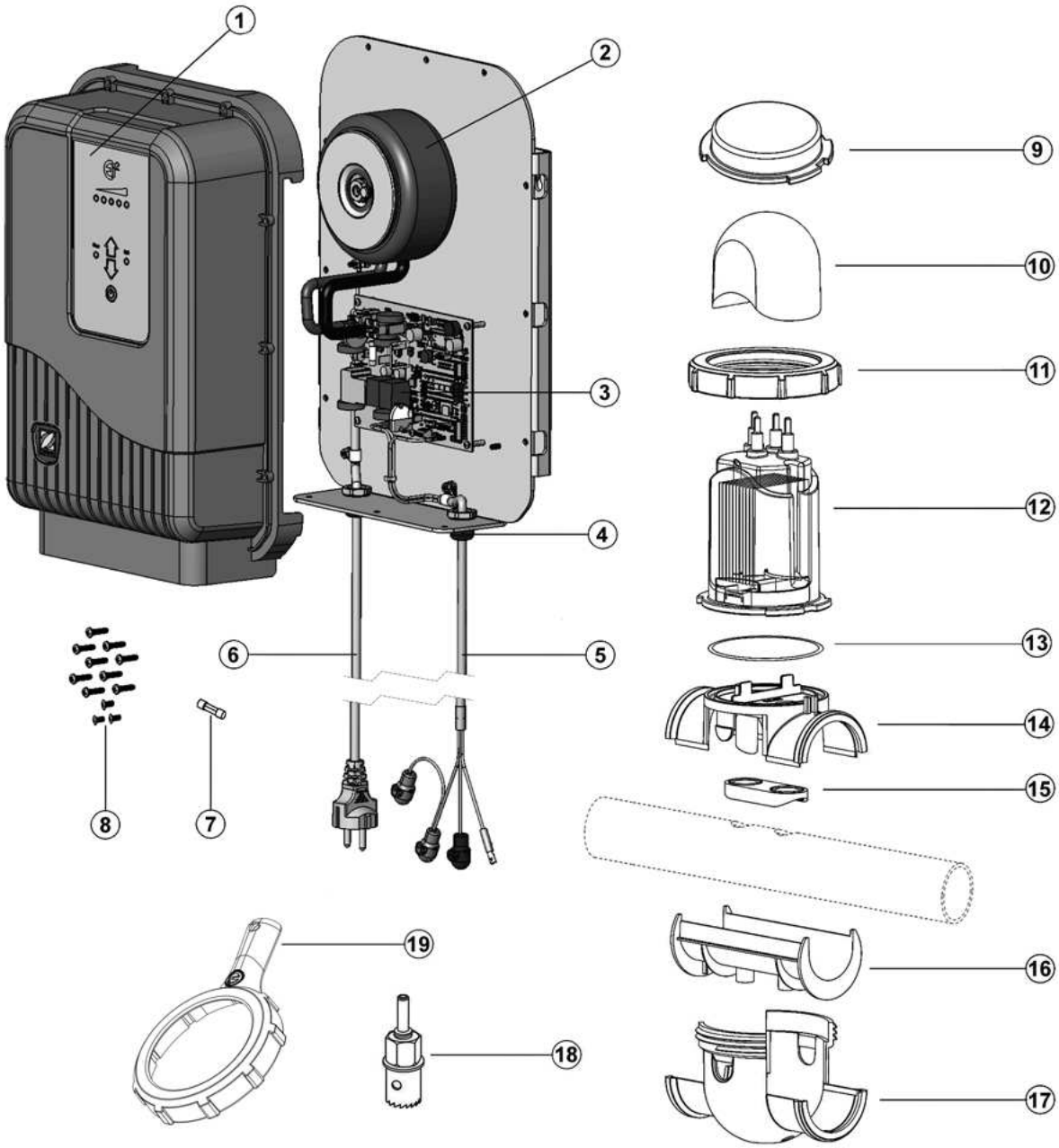
1
2
3
4
5
6
7
8
9
10
11
12
13
14
15
16
17
18
19

Position	Description	Reference
1	Cover assembly with lexan	R0625400
2	Transformer kit	R0609700
3	Power PCB (with thermal paste & screws)	R0625600
	Power PCB (with thermal paste & screws) cover mode version	R0871600
4	Cable glands kit (x2)	R0625700
5	Cell cable	R0609800
6	Mains supply cable	R0625100
7	M205 2.5 A T Fuse	W110201
8	Cover screw set (9 x M4/17 & 3 x M4/8)	R0609400
9	Winterizing cap for cell	R0770100
10	Cell cap	R0768000
11	Electrode tightening ring	R0768200
12	Complete Ei² 12 electrode	R0673600
	Complete Ei² 20 electrode	R0673700
	Complete Ei² 25 electrode	R0759000
13	Electrode O-ring	R0738500
14	Saddle clamp top	R0767900
15	Flat hose joint 1 ½” (UK)	R0767800
	Flat hose joint DN50 mm & DN63 mm (EU)	R0769700
16	UK pipe adapter (1 ½”)	R0770200
	EU pipe adapter (DN50 mm)	R0770000
17	Saddle clamp top	R0768400
18	Hole saw 22 mm for pipe drilling	R0797300
19	Locking ring wrench (not included in the pack)	R0769900

Ei² Expert

Spare Parts

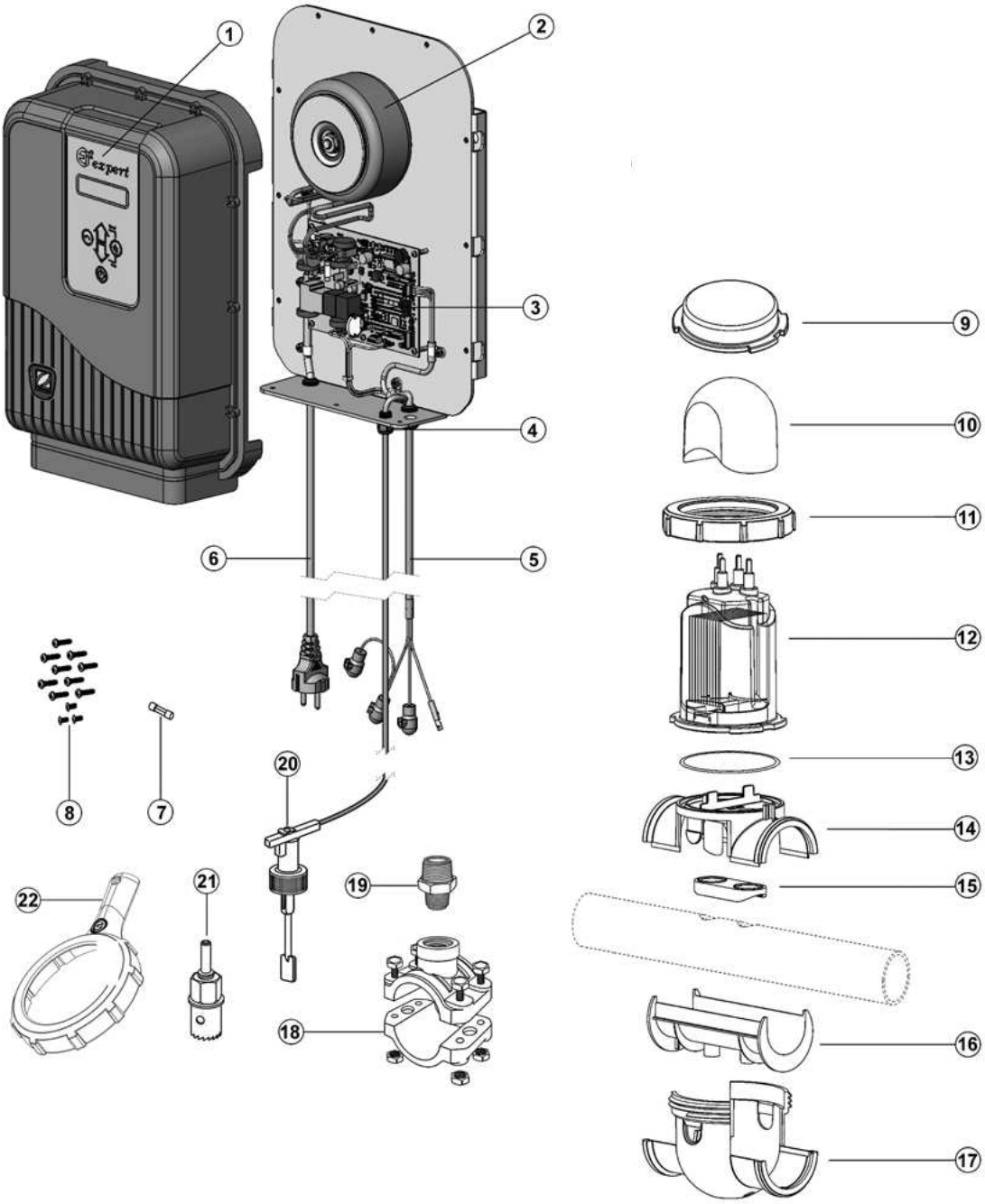

Position	Description	Reference
1	Cover assembly with lexan & control PCB	R0664000
2	Transformer kit	R0609700
3	Power PCB (with thermal paste & screws)	R0664100
4	Cable glands kit (x4)	R0664300
5	Cell cable	R0664200
6	Mains supply cable	R0625100
7	M205 2.5 A T Fuse	W110201
8	Cover screw set (9 x M4/17 & 3 x M4/8)	R0609400
9	Winterizing cap for cell	R0770100
10	Cell cap	R0768000
11	Electrode tightening ring	R0768200
12	Complete GenSalt OE 10 electrode	R0758800
	Complete GenSalt OE 17 electrode	R0758900
	Complete Ei² 25 electrode	R0759000
13	Electrode O-ring	R0738500
14	Saddle clamp top	R0767900
15	Flat hose joint 1 ½” (UK)	R0767800
	Flat hose joint DN50 mm & DN63 mm (EU)	R0769700
16	UK pipe adapter (1 ½”)	R0770200
	EU pipe adapter (DN50 mm)	R0770000
17	Saddle clamp top	R0768400
18	Complete DN50 mm saddle clamp (adaptable to 1 ½ ‘’ UK)	W013010
	Complete DN63 mm saddle clamp (adaptable to 2 ‘’ UK) - not included in the product	W013011
19	3/4”x1/2” adapter for flow switch	R0797200
20	Ei² Expert flow switch	R0773400
21	Hole saw 22 mm for pipe drilling	R0797300
22	Locking ring wrench (not included in the pack)	R0769900

eXO® iQ, eXO® iQ LS

Spare Parts

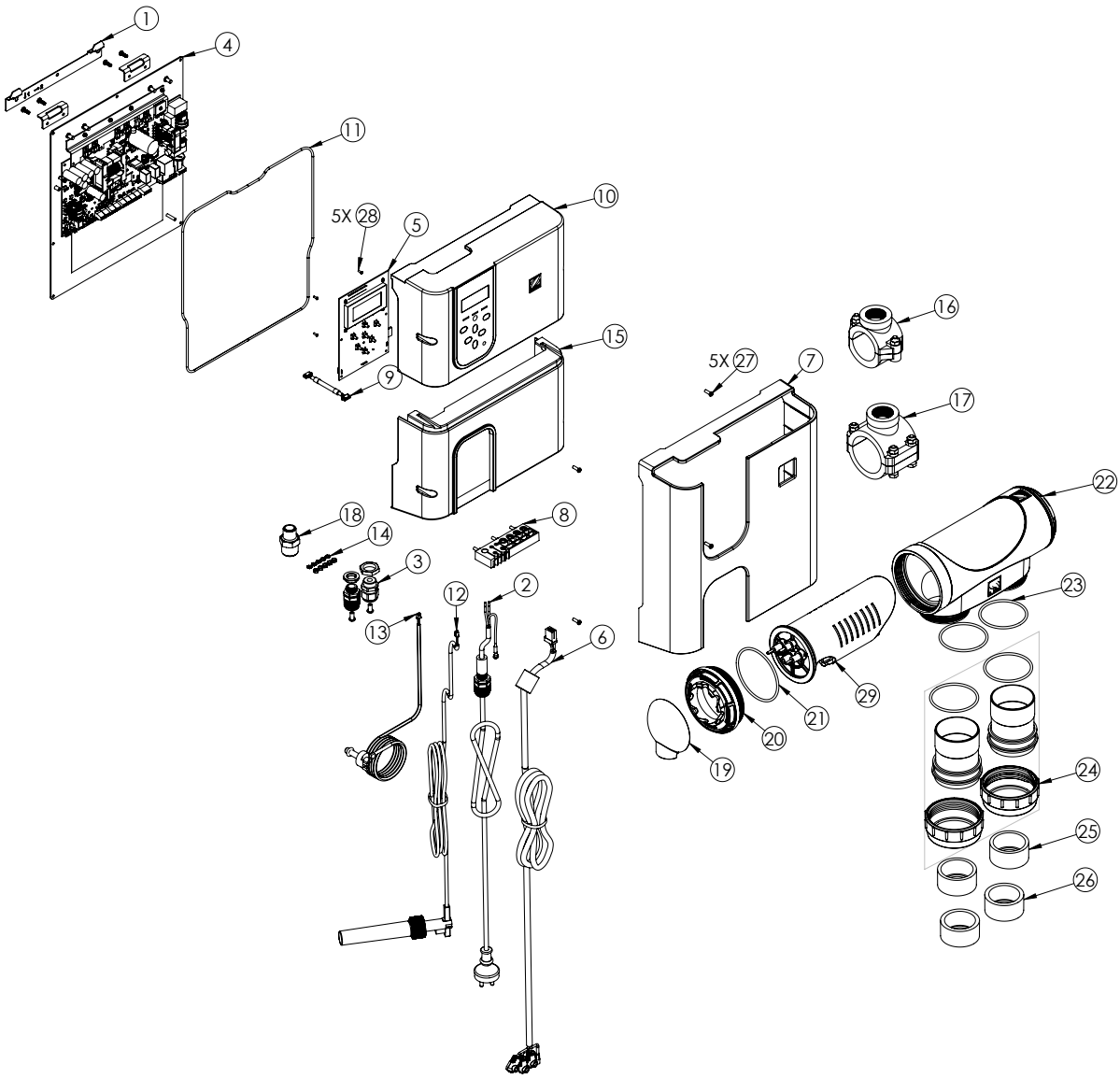

Position	Description	Reference
1	Wall mount kit w/ screws	R0821100
2	Device power cord	R0821200
3	Cable gland kit	R0821600
4	Power supply electronic card eXO® iQ / eXO® iQ LS	R0821700
5	HMI Wi-Fi control card	R0822300
6	Cell cable	R0822500
7	eXO® iQ black cover	R0822700
	eXO® iQ LS blue cover	R0822800
8	Soft grommet	R0823000
9	HMI control card cable	R0823100
10	eXO® iQ / eXO® iQ LS grey upper housing	R0823200
11	Chassis O-ring	R0823600
12	Flow switch with connector	R0823800
13	Temperature sensor kit (with 4,5 m cable + O-ring + stainless steel collar)	R0823900
14	Ground connection kit (x5)	R0824000
15	eXO® iQ / eXO® iQ LS grey lower housing	R0824200
16	Complete DN50 mm saddle clamp (adaptable to 1 ½ ‘’ UK)	W013010
17	Complete DN63 mm saddle clamp (adaptable to 2 ‘’ UK) - not included in the product	W013011
18	3/4”x1/2” adapter for flow switch	R0797200
19	TRi cell protective cap	R0740800
	eXO® iQ LS cell protective cap blue	R0742300
20	Electrode tightening ring	R0740600
21	Electrode O-ring (x2)	R0739000
22	Empty TRi cell body	R0740200
23	Barrel union Oring (x2)	R0737700
24	Barrel union set for TRi DN63 mm / 2”	R0748700
25	PVC DN50 mm adapter to glue	R0768600
26	PVC 1 ½’ adapter to glue (UK)	R0770300
27	Screws 4*12 mm (x5)	R0516700
28	Screws 2,2*6,5 mm (x5)	R0564500
29	Complete TRi 10 electrode	R0758400
	Complete eXO® iQ 10 electrode	R0635200
	Complete TRi 18 electrode	R0758500
	Complete eXO® iQ 18 electrode	R0635201
	Complete TRi 22 electrode	R0758600
	Complete TRi 35 electrode	R0758700

pH Link et Dual Link 2019

Spare Parts

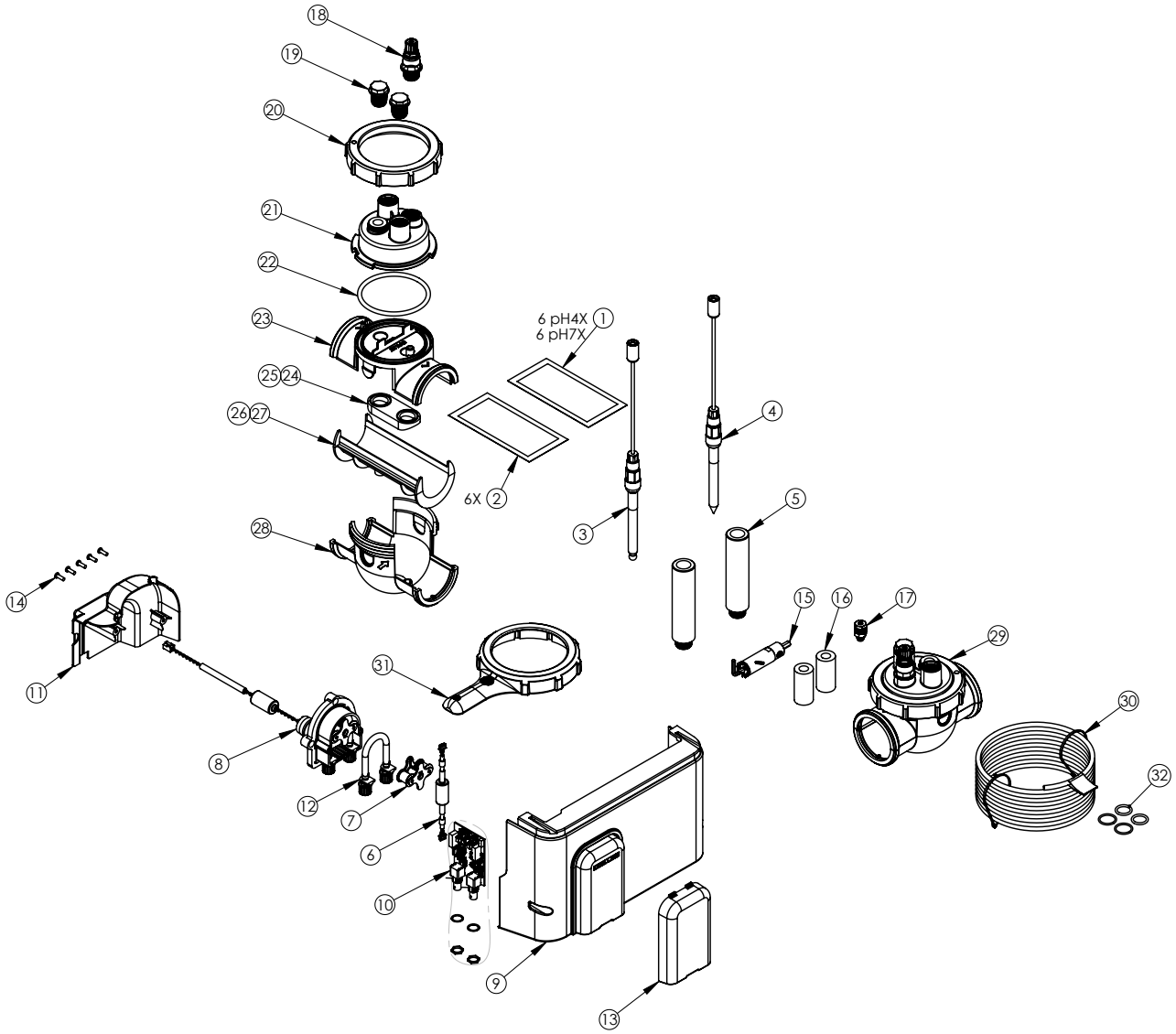

Position	Description	Reference
1	pH Buffer solution kit (6x pH 4 and 6x pH 7)	R0824400
2	ORP buffer solution kit (6x 470 mV)	R0824500
3	Sensor holder and pH sensor P19 with 3 m BNC cable kit	R0868700
4	Sensor holder and ORP sensor P19 with 3 m BNC cable kit	R0868800
5	Sensor holder P19 - starting 2019	R0824600
6	Module electronic card cable	R0824700
7	Peristaltic pH pump roller	R0824800
8	Complete peristaltic pH pump	R0824900
9	pH Link module lower housing	R0825000
	Dual Link module lower housing	R0825100
10	pH Link module electronic card	R0825200
	Dual Link module electronic card	R0825300
11	Module back cover	R0825400
12	Peristaltic pump head with hose (with connectors) modules 2019	R0825600
13	pH pump translucent window	R0825700
14	Screws 4*12 mm (x5)	R0516700
15	Hole saw 22 mm for pipe drilling	R0797300
16	Ceramic counter-weight	R0741200
17	Ceramic counter-weight retaining nozzle for suction hose	R0797100
18	Injection check valve - ½”	R0738100
19	Threaded plug ½” (+ oring)	R0740500
20	Electrode tightening ring	R0768200
21	POD (+ threaded adapter for flow detector)	R0749000
22	Electrode O-ring	R0738500
23	Saddle clamp top	R0767900
24	Flat hose joint DN50 mm & DN63 mm (EU)	R0769700
25	Flat hose joint 1 ½” (UK)	R0767800
26	EU pipe adapter (DN50 mm)	R0770000
27	UK pipe adapter (1 ½”)	R0770200
28	Saddle clamp top	R0768400
29	POD Kit	R0534900
30	Polyethylene correcting fluid injector tube 4x6 mm (5 meters)	R0748200
31	Locking ring wrench (not included in the pack)	R0769900
32	O-ring kit (pH/POD cork o-ring x 2 & P19 sensor holder o-ting x2)	R0830700
33	Complete anti-emission suction pipe	R0808000

Hydroxinator® iQ

Spare Parts

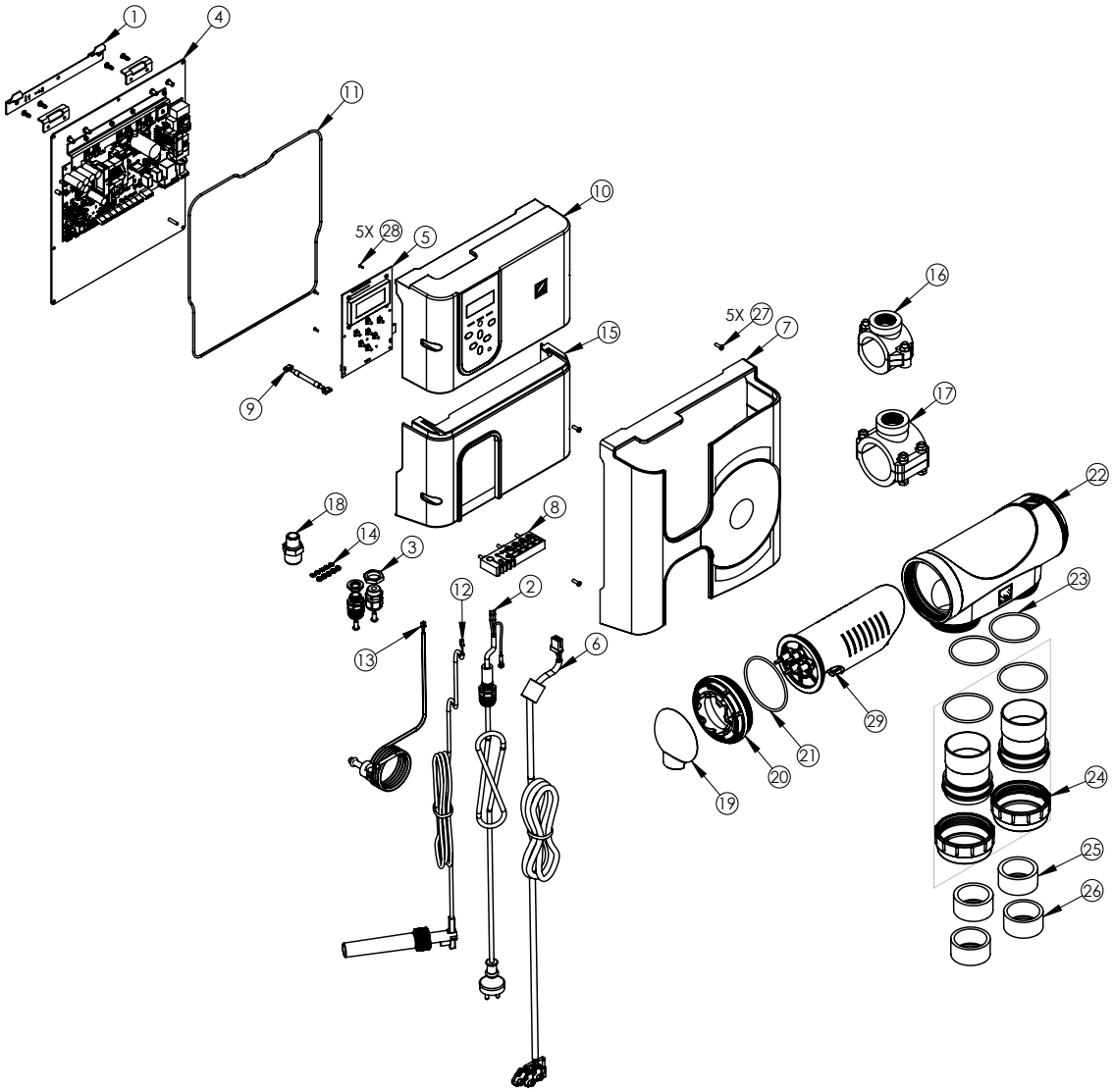

Position	Description	Reference
1	Wall mount kit w/ screws	R0821100
2	Device power cord	R0821200
3	Cable gland kit	R0821600
4	Power supply electronic card Hydroxinator® iQ	R0821800
5	HMI Wi-Fi control card	R0822300
6	Cell cable	R0822500
7	Hydroxinator® iQ cover	R0822900
8	Soft grommet	R0823000
9	HMI control card cable	R0823100
10	Hydroxinator® iQ grey upper housing	R0823300
11	Chassis O-ring	R0823600
12	Flow switch with connector	R0823800
13	Temperature sensor kit (with 4,5 m cable + O-ring + stainless steel collar)	R0823900
14	Ground connection kit (x5)	R0824000
15	Hydroxinator® iQ grey lower housing	R0824300
16	Complete DN50 mm saddle clamp (adaptable to 1 ½ ‘’ UK)	W013010
17	Complete DN63 mm saddle clamp (adaptable to 2 ‘’ UK) - not included in the product	W013011
18	3/4”x1/2” adapter for flow switch	R0797200
19	eXO® iQ LS cell protective cap blue	R0742300
20	Electrode tightening ring	R0740600
21	Electrode O-ring (x2)	R0739000
22	Empty TRi cell body	R0740200
23	Barrel union Oring (x2)	R0737700
24	Barrel union set for TRi DN63 mm / 2”	R0748700
25	PVC DN50 mm adapter to glue	R0768600
26	PVC 1 ½’ adapter to glue (UK)	R0770300
27	Screws 4*12 mm (x5)	R0516700
28	Screws 2,2*6,5 mm (x5)	R0564500
29	Complete eXO® iQ 10 electrode	R0635200
	Complete eXO® iQ 18 electrode	R0635201
	Complete eXO® iQ 22 electrode	R0635202
	Complete eXO® iQ 35 electrode	R0635203

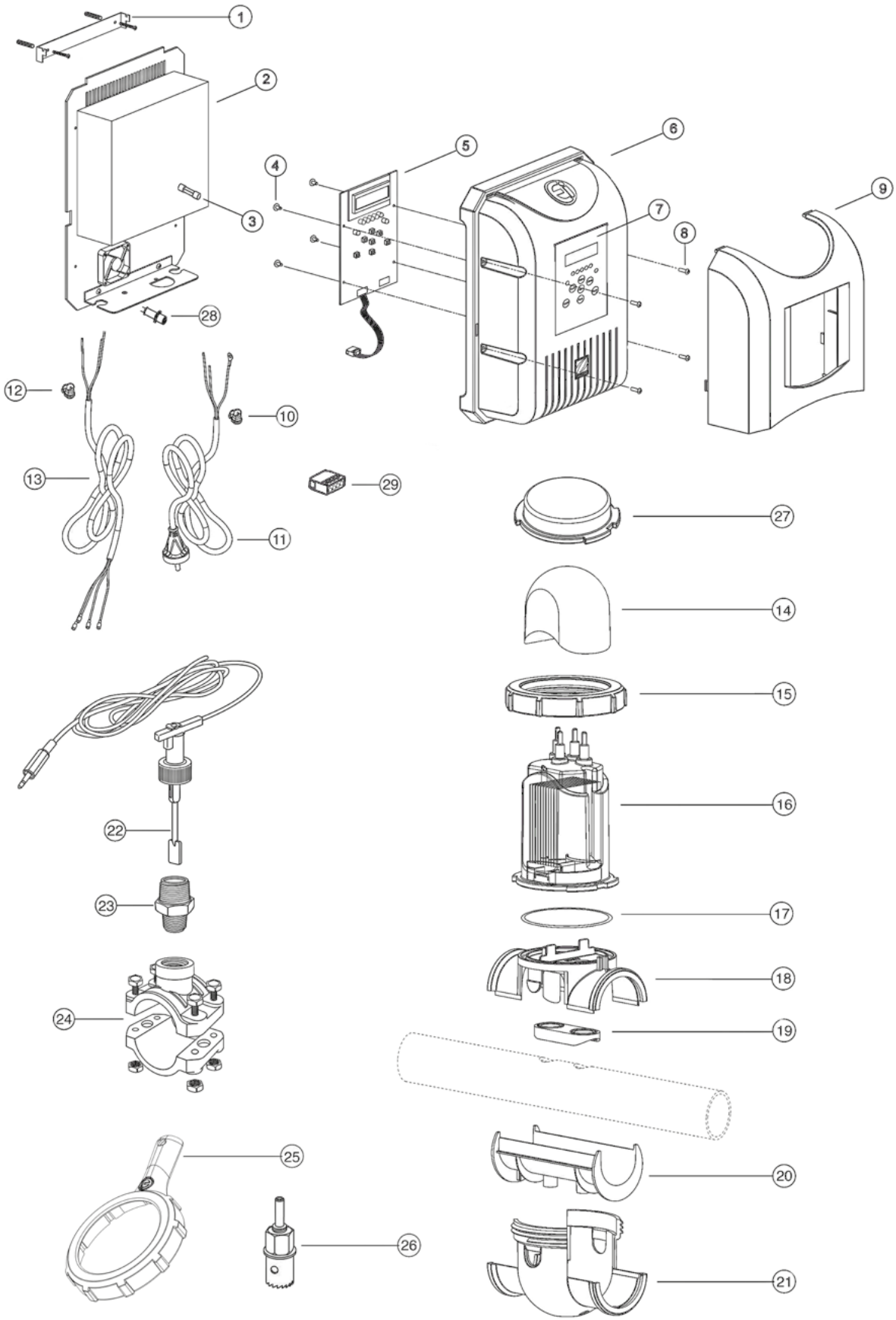
1
2
3
4
5
6
7
8
9
10
11
12
13
14
15
16
17
18
19
20
21
22
23
24
25
26
27
28
29

Position	Description	Reference
1	Wall mount kit w/ screws	W012781
2	Power supply set (aluminium chasis + card + ventilator)	W083073
3	M205 3.15 A T Fuse	W110091
4	4x¼” fixing screws for electronic board (x4)	R0743400
5	Control PCB	W083061
6	Ei control unit plastic cover - 1 piece complete	W043590*
	Ei control unit plastic cover / top part	W043591
	Ei control unit plastic bottom rail	W043592
7	Ei control panel sticker	W177000
8	M3x12 mm fixing screws for Ei plastic cover	W001481
9	Ei upper cover silver	W043780**
10	Cable grip for mains power supply	W001371
11	Mains supply cable with EU plug	W052650
12	Cable grip for cell power supply	R0768100
13	Complete cell mains supply cable	R0740300
14	Cell cap	R0768000
15	Electrode tightening ring	R0768200
16	Complete GenSalt OE 10 electrode	R0758800
	Complete GenSalt OE 17 electrode	R0758900
	Complete Ei² 25 electrode	R0759000
17	Electrode O-ring	R0738500
18	Saddle clamp top	R0767900
19	Flat hose joint 1 ½” (UK)	R0767800
	Flat hose joint DN50 mm & DN63 mm (EU)	R0769700
20	UK pipe adapter (1 ½”)	R0770200
	EU pipe adapter (DN50 mm)	R0770000
21	Saddle clamp top	R0768400
22	Complete flow switch (+ cable and jack 3.5 mm) - before 2017	R0737500
23	3/4”x1/2” adapter for flow switch	R0797200
24	Complete DN50 mm saddle clamp (adaptable to 1 ½ ‘’ UK)	W013010
	Complete DN63 mm saddle clamp (adaptable to 2 ‘’ UK) - not included in the product	W013011
25	Locking ring wrench (not included in the pack)	R0769900
26	Hole saw 22 mm for pipe drilling	R0797300
27	Winterizing cap for cell	R0770100
28	3.5 mm female plug jack	R0749600
29	4-way cable connector (x2)	R0737900

* : Available while stock lasts. Replaced by 2 parts W043591 & W043592.
** : Available while stock lasts. Will be replaced by W043600 (same part with different finish).

TRi Expert / TRi Expert LS / TRi

Spare Parts

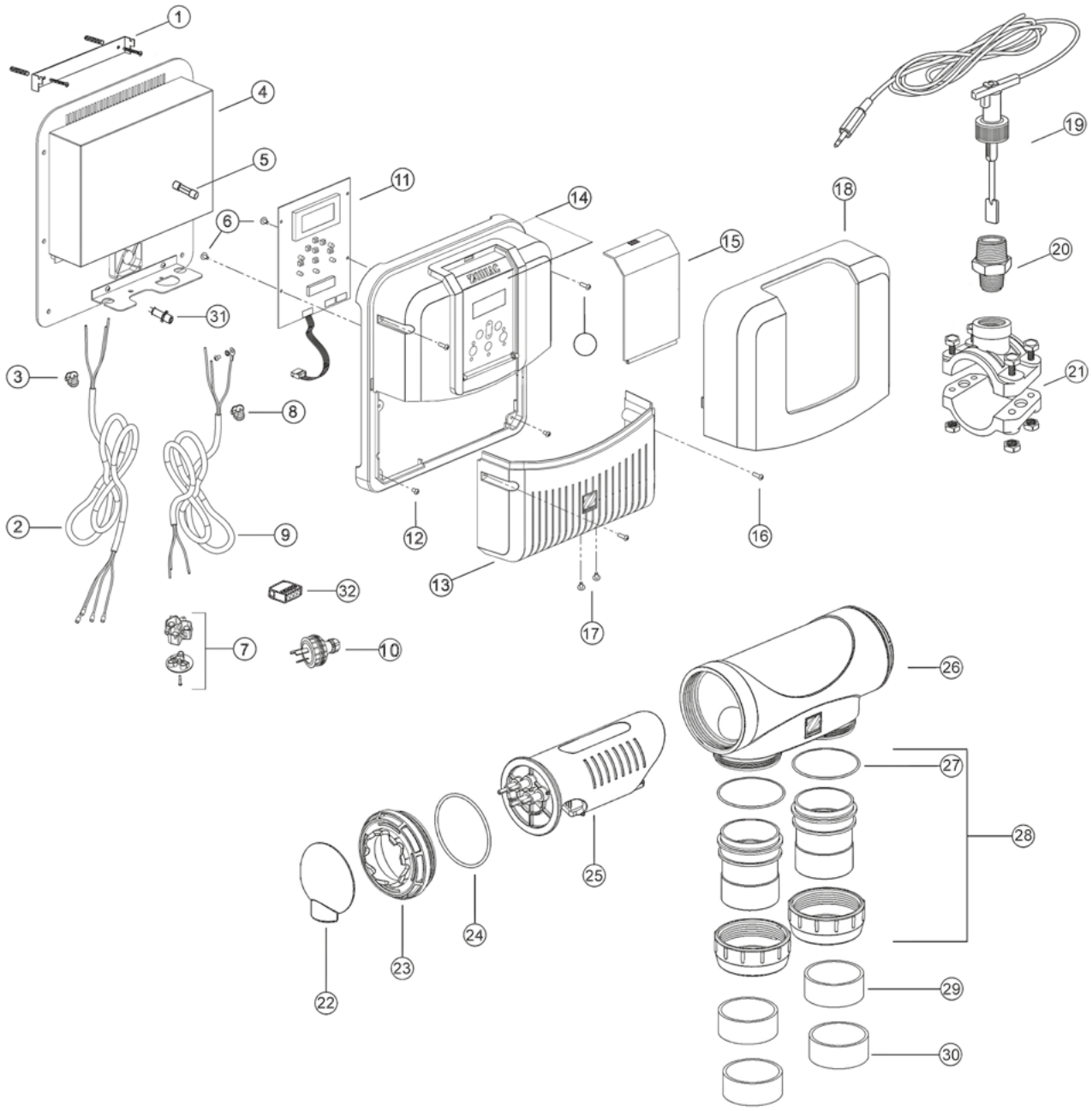

Position	Description	Reference
1	Wall mount kit w/ screws	R0740700
2	Complete cell mains supply cable	R0740300
3	Cable grip for cell power supply	R0768100
4	Power supply set (aluminium chasis + card + ventilator)	W082981
5	M205 2.5 A T Fuse	W110201
6	4x¼” fixing screws for electronic board (x4)	R0743400
7	“AUS” female Type plug	R0741300
8	Cable grip for mains power supply	R0742900
9	Mains supply cable	R0741501
10	Male 3 pin plug “AUS” Type	R0768700
11	Control PCB	W082993
12	M4x6 mm lower fixing screw for main cover (x4)	R0741400
13	Lower cover for standard TRi	R0742500
14	Main cover for control unit with TRi with control panel label (blue & yellow)	R0743204
	Main cover for control unit with TRi with black control panel label	R0743203
	Main cover for control unit with TRi LS with black control panel label	R0743205
15	Transparent plexi protection cover for control panel	R0741800
16	M4x20 mm fixing screws for covers (box and lower cover) (x4)	R0743000
17	M3x5 mm fixing screws for lower plate (x2)	R0742400
18	Silver TRi housing cover	R0744100
	Black TRi Expert housing cover	R0741000
19	Complete flow switch (+ cable and jack 3.5 mm) - before 2017	R0737500
	Complete flow switch (+ cable) - after 2017	R0792800
20	3/4”x1/2” adapter for flow switch	R0797200
21	Complete DN50 mm saddle clamp (adaptable to 1 ½ ‘’ UK)	W013010
	Complete DN63 mm saddle clamp (adaptable to 2 ‘’ UK) - not included in the product	W013011
22	TRi cell protective cap	R0740800
23	Electrode tightening ring	R0740600
24	Electrode O-ring (x2)	R0739000
25	Complete TRi 10 electrode	R0758400
	Complete TRi LS 10 electrode	R0806300
	Complete TRi 18 electrode	R0758500
	Complete TRi LS 18 electrode	R0806400
	Complete TRi 22 electrode	R0758600
	Complete TRi 35 electrode	R0758700
26	Empty TRi cell body	R0740200
27	Barrel union Oring (x2)	R0737700
28	Barrel union set for TRi DN63 mm / 2”	R0748700
29	PVC DN50 mm adapter to glue	R0768600
30	PVC 1 ½’ adapter to glue (UK)	R0770300
31	3.5 mm female plug jack	R0749600
32	4-way cable connector (x2)	R0737900

Hydroxinator® - before 2019

Spare Parts

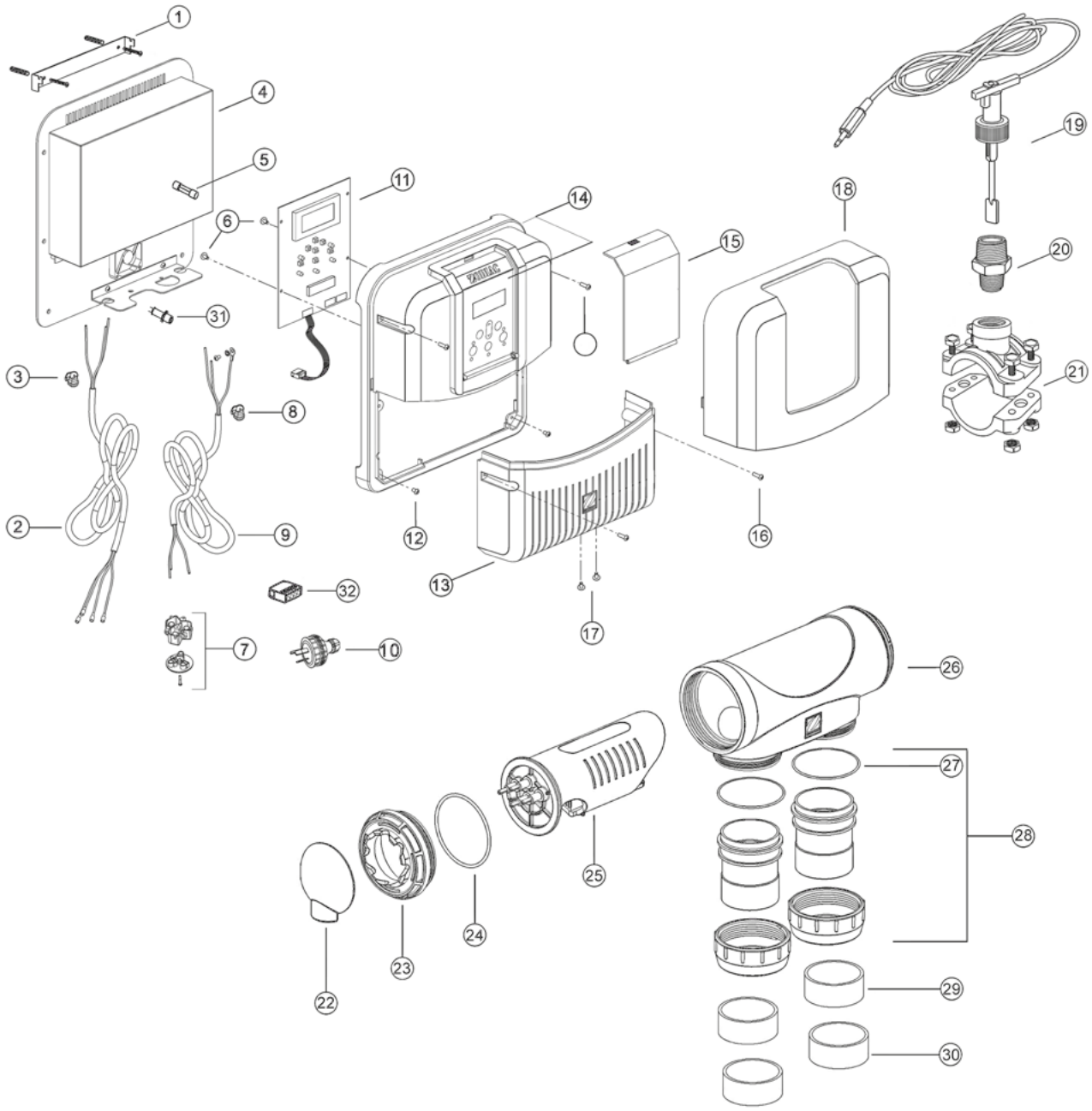

Position	Description	Reference
1	Wall mount kit w/ screws	R0740700
2	Complete cell mains supply cable	R0740300
3	Cable grip for cell power supply	R0768100
4	Power supply set (aluminium chasis + card + ventilator)	W082981
5	M205 2.5 A T Fuse	W110201
6	4x¼” fixing screws for electronic board (x4)	R0743400
7	“AUS” female Type plug	R0741300
8	Cable grip for mains power supply	R0742900
9	Mains supply cable	R0741501
10	Male 3 pin plug “AUS” Type	R0768700
11	Hydroxinator® control PCB	R0615400
12	M4x6 mm lower fixing screw for main cover (x4)	R0741400
13	Lower cover for standard TRi	R0742500
14	Main cover for control unit with Hydroxinator® control panel label	R0743201
15	Transparent plexi protection cover for control panel	R0741800
16	M4x20 mm fixing screws for covers (box and lower cover) (x4)	R0743000
17	M3x5 mm fixing screws for lower plate (x2)	R0742400
18	Hydroxinator® blue housing cover	R0742600
19	Complete flow switch (+ cable and jack 3.5 mm) - before 2017	R0737500
	Complete flow switch (+ cable) - after 2017	R0792800
20	3/4”x1/2” adapter for flow switch	R0797200
21	Complete DN50 mm saddle clamp (adaptable to 1 ½ ‘’ UK)	W013010
	Complete DN63 mm saddle clamp (adaptable to 2 ‘’ UK) - not included in the product	W013011
22	eXO® iQ LS cell protective cap blue	R0742300
23	Electrode tightening ring	R0740600
24	Electrode O-ring (x2)	R0739000
25	Complete eXO® iQ 10 electrode	R0635200
	Complete eXO® iQ 18 electrode	R0635201
	Complete eXO® iQ 22 electrode	R0635202
	Complete eXO® iQ 35 electrode	R0635203
26	Empty TRi cell body	R0740200
27	Barrel union Oring (x2)	R0737700
28	Barrel union set for TRi DN63 mm / 2”	R0748700
29	PVC DN50 mm adapter to glue	R0768600
30	PVC 1 ½’ adapter to glue (UK)	R0770300
31	3.5 mm female plug jack	R0749600
32	4-way cable connector (x2)	R0737900

TRi pH, TRi PRO, pH Link et Dual Link

Spare Parts

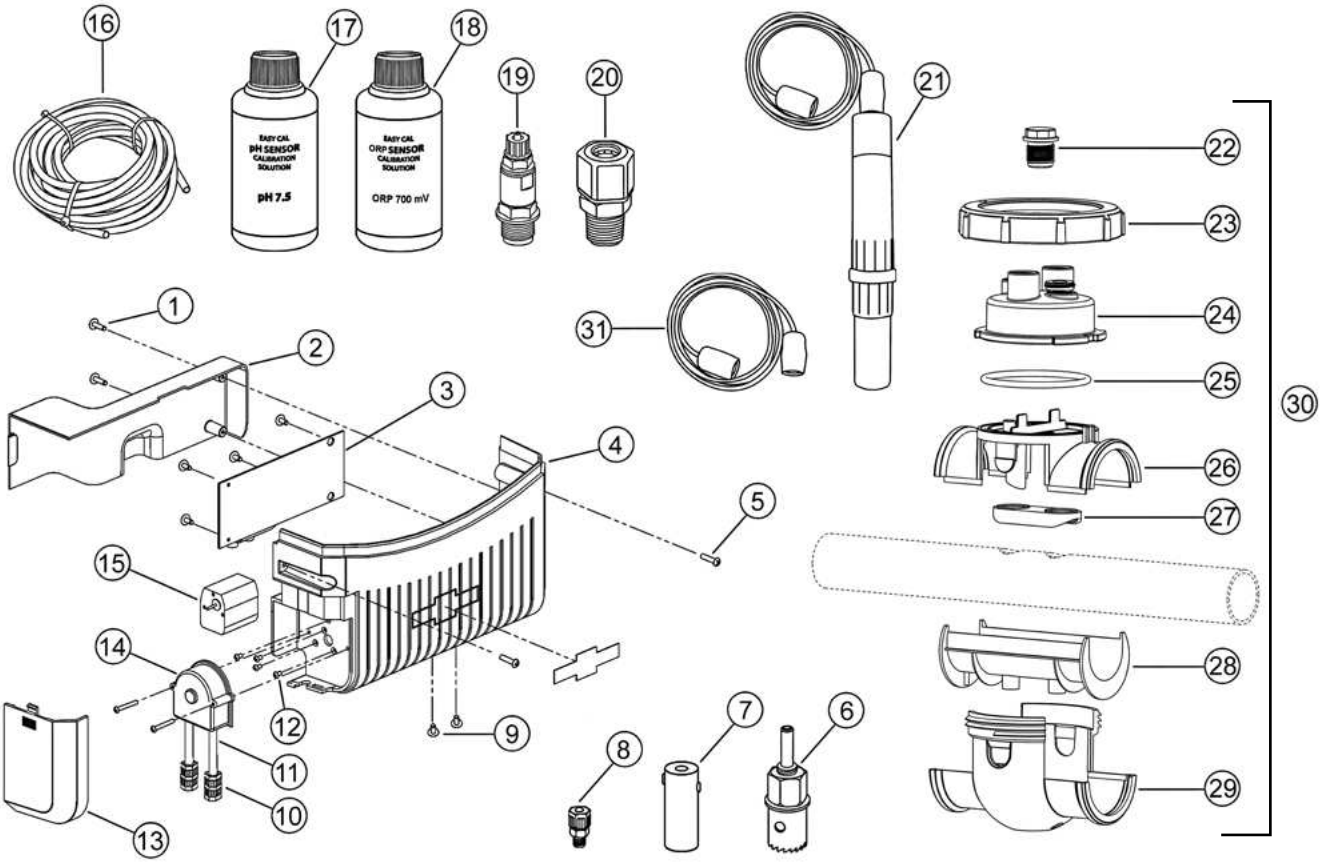

- before 2019

Position	Description	Reference
1	4x¼” fixing screws for electronic board (x4)	R0743400
2	Module electronic board protection	R0743300
3	pH electronic board (TRi pH & pH Link)	W083001
	pH & ACL electronic board (TRi PRO & Dual Link)	W083011
4	TRi module plastic cover (without sticker)	R0745303
5	M4x20 mm fixing screws for covers (box and lower cover) (x4)	R0743000
6	Hole saw 22 mm for pipe drilling	R0797300
7	Ceramic counter-weight	R0741200
8	Ceramic counter-weight retaining nozzle for suction hose	R0797100
9	M3x5 mm fixing screws for lower plate (x2)	R0742400
10	Peristaltic hose connector (per item: 2 per hose)	R0740400
11	Peristaltic hose (no connectors)	R0737300
12	M3x6 mm fixing screws for peristaltic pump motor (x4)	R0744200
13	Peristaltic pump protection cover	R0742800
14	Peristaltic pump head with hose (no connectors)	R0740100
15	Peristaltic pump motor	R0750700
16	Polyethylene correcting fluid injector tube 4x6 mm (5 meters)	R0748200
17	Buffer solution “pH 7.5” (70 mL)	R0800900
18	Buffer solution “ORP 700 mV” (70 mL)	R0801000
19	Injection check valve - ½”	R0738100
20	Reinforced sensor holder	W013016
	Sensor holder P19 - starting 2019	R0824600
21	Sensor holder and pH sensor P19 with 3 m BNC cable kit - starting 2019	R0868700
	Sensor holder and ORP sensor P19 with 3 m BNC cable kit - starting 2019	R0868800
22	Threaded plug ½” (+ oring)	R0740500
23	Electrode tightening ring	R0768200
24	POD (+ threaded adapter for flow detector)	R0749000
25	Electrode O-ring	R0738500
26	Saddle clamp top	R0767900
27	Flat hose joint DN50 mm & DN63 mm (EU)	R0769700
	Flat hose joint 1 ½” (UK)	R0767800
28	EU pipe adapter (DN50 mm)	R0770000
	UK pipe adapter (1 ½”)	R0770200
29	Saddle clamp top	R0768400
30	POD Kit	R0534900
31	3 m BNC cable extension for pH & ACL “Z54” sensors	R0635800
32	Complete anti-emission suction pipe	R0808000

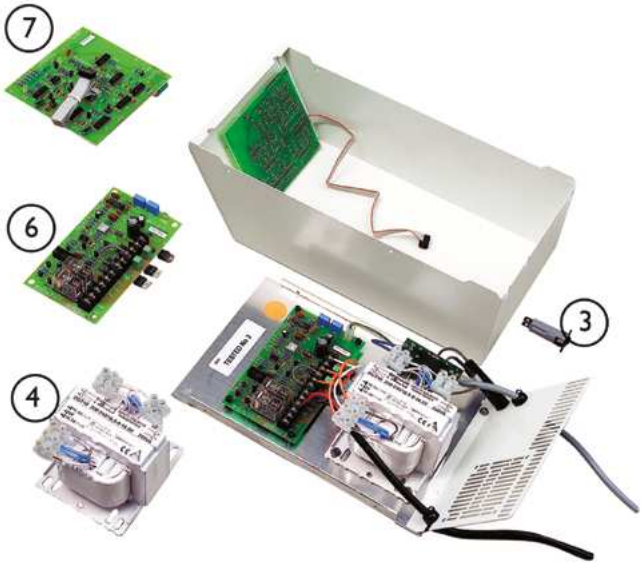
7
6
3
4

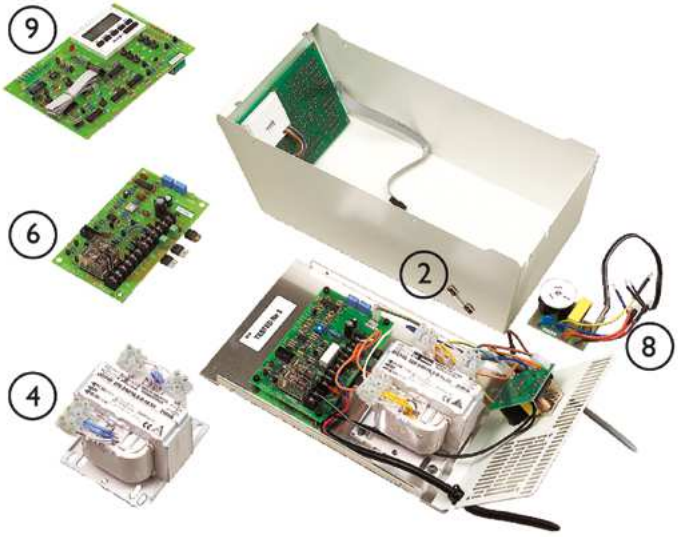
9
6
2
8
4

5
1

Position	Description	Reference
\	LM/D PCB fixing screw (M3X8 mm)	W000351
	Insulation kit LM/D Series power PCB	W000651
	LM/D Series PCB stand off	W001091
	LM Fuse holder 5x20mm	R0769600
1	LM/D Series barrel union 1½" (with Oring, UK)	R0748900
	LM/D Series barrel union DN50 mm (with Oring)	R0737200
2	LM TS 2 A replacement fuse (fits LM1 & D Series)	R0749200
3	LM2 S resetable fuse	W111071
4	LM2-10, 15 & 24 transformer (220-240 V / 17.5 V)	W130591
	LM2-40 transformer (220-240 V / 24 V)	W130421
\	Complete LM2 cell mains supply cable (with connectors)	W193201
	Empty LM2 cell housing (for after sales operations)	W200701
5	Complete LM2-10 Cell	R0759100
	Complete LM2-15 Cell	R0759200
	Complete LM2-24 Cell	R0759300
	Complete LM2-30 Cell	R0759400
	Complete LM2-40 Cell	R0759500
6	LM2 power PCB	W222091
7	LM2 S control PCB	W222111
8	LM2 TS pump supply PCB	W222131
\	LM2 S mains filter PCB	W222241
9	LM2 TS control PCB (manufacturing date > 09/2007)*	W082741

* Power PCB must be replaced with a W222091 at the same time if control PCB is replaced on an unit manufactured before September 2007.

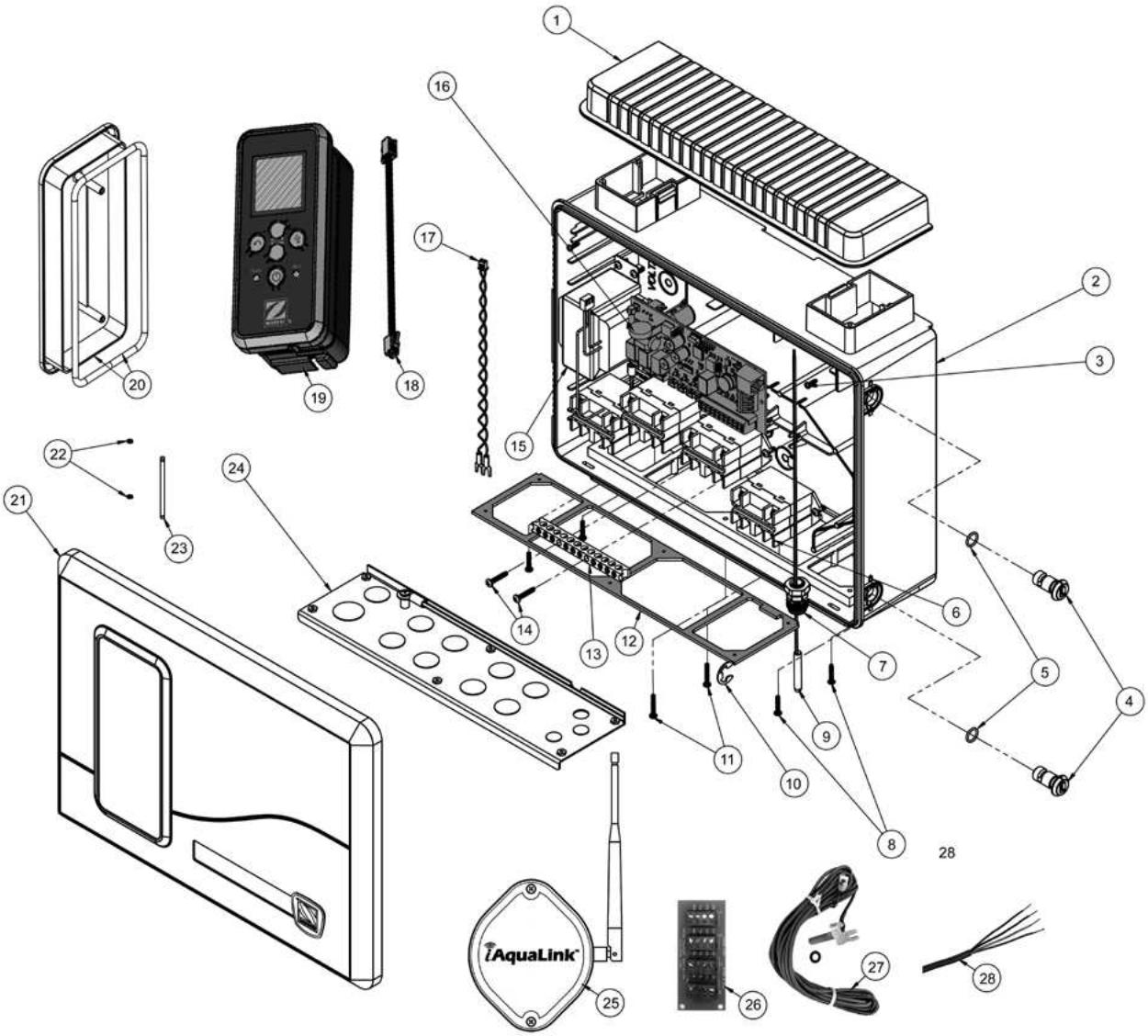
1
2
3
4
5
6
7
8
9
10
11
12
13
14
15
16
17
18
19
20
21
22
23
24
25
26
27
28
iAquaLink

Position	Description	Reference
1+2	R-Kit AquaLink TRi enclosure complete (enclosure + cover + 2 screws)	R0569700
1+3	R-Kit top vent cover (cover + 2 screws)	R0568900
4+5+10	R-Kit door tumblers (2 tumblers + 2 Orings + 2 e-clips)	R0568400
6+17	R-Ki relay (relay + 24 V wiring)	R0658100
7	R-Kit cable glands (2 x M12, 9 x M20 & 1 x M25)	R0569500
9	R-Kit air temp sensor (with 5 m cable)	R0568500
8+11+12+24	R-Kit metal base plate (plate + seal + 6 screws)	R0569100
13+14	R-Kit grounding bar (bar + 2 screws)	R0568700
15	R-Kit 220-240 VAC / 50 Hz transformer (with fixing screws)	R0569300
16	R-Kit main power PCB (with 2 screws)	R0568200
18+19	R-Kit user interface assembly (enclosure + Oring + control PCB + 2 screws + RJ11 comms cable / Pool only)	R0568300
20	R-Kit blanking plate assembly (plate + Oring + metal plate + 2 screws + 5 m comms cable)	R0568600
21+22+23	R-Kit AquaLink TRi door assembly (door + hinge pins + name & brand labels / WITHOUT user interface)	R0569401
25	R-Kit iAquaLink iQ20 antenna (with USB cable & screws)	IQ20-E
26	R-Kit multiplex board (to be used when more than 2 RS485 cables are connected)	R0570200
27	R-Kit water/solar temp sensor (with 15 m cable + Oring + stainless steel collar)	R0570100
28	RS485 cable for connecting iAquaLink ™ compatible devices - 30 m	R0809300
\	R-Kit ø4 x 3/8” screws x6 (for PCB or top vent cover)	R0741700
	R-Kit ø6 x 3/8” scrws x12 (for relays or transfomer)	R0741600

GENERAL TERMS OF SALE
ZODIAC POOL CARE EUROPE

1 - SCOPE AND DATE OF EFFECT OF THE GENERAL TERMS OF SALE

These general terms of sale (hereinafter the «GTS») apply as from 2 January 2015 and cancel and replace any earlier general terms of sale of Zodiac Pool Care Europe (hereinafter «ZPCE») that may feature on ZPCE documents or have been agreed by any other means.

The GTS apply to all Zodiac Products taken as a whole or in different categories (hereinafter the «Products») sold by ZPCE to its Customers (hereinafter «Customers») both in mainland France and abroad. ZPCE and its Customer are hereinafter referred to as «the Parties».

The GTS have been drawn up in compliance with the principle of transparency that governs relations between ZPCE and its Customers and form an integral part of the ZPCE price terms. Under article L 441-6 of the French Code of Commerce, these GTS form the basis of commercial negotiation between ZPCE and its Customers and the framework for their business relations.
Except in the case of prior, written and express exemption by ZPCE, any order of Products by a Customer from ZPCE, whatever the origin, entails acceptance of the GTS, which cancel any contradictory clause that may be included in the purchasing terms, contracts, documents or correspondence of the Customer.
It is expressly understood that ZPCE is not bound to accept any purchasing terms or demands from the Customer that are abusive, exorbitant or deviate from the GTS. Under article L 442-6 of the French Code of Commerce, the Customer is prohibited from demanding that ZPCE grant it terms that cause a significant imbalance in the rights and obligations agreed between the Parties under their business agreement.
Under article L 442-6 of the French Code of Commerce, the Customer is also prohibited from demanding that ZPCE align its terms with business terms that the Customer deems more favorable and that it may have granted to other Customers on an individual basis.

2 – OPENING AN ACCOUNT AND TERMS OF CREDIT

All potential Customers must request the opening of an account with ZPCE prior to placing its first order, in compliance with the procedure in place at ZPCE. When the request is received, an external service company appointed by ZPCE will perform a financial analysis of the creditworthiness of the potential Customer. ZPCE reserves the right to refuse to open an account or, subsequently, grant a line of credit to a Customer if the financial information does not satisfy ZPCE criteria for creditworthiness. The Customer may however supply ZPCE with supplementary information to the financial analysis performed by the service company and/or provide ZPCE with guarantees in order to open the account.

3 - ORDERS

The information, standards and characteristics specified in ZPCE paper or electronic documentation (catalogue, notices, sheets, leaflets, brochures, mailshots, etc.) are provided for information purposes only. ZPCE reserves the right to make any appropriate changes to the Products, even during the order processing stage, provided that the essential characteristics and performances of the Products remain unaffected.
All orders must be placed in writing (even by fax or e-mail), duly signed by the Customer and specify the reference(s) of the ordered Product(s).
Orders are only considered final once they have been accepted by ZPCE. If no written reply has been received from ZPCE within twenty-four (24) hours as from the date of receiving the order, the said order shall be deemed to have been tacitly accepted by ZPCE subject to strict compliance by the Customer with GTS provisions. When orders are received after 12 noon, the time period for tacit acceptance begins at 9 AM the following morning. ZPCE reserves the right to refuse any order that contains anomalies or that does not contain sufficient information to fulfil the said order.
The Customer acknowledges that it has sufficient experience and competence to assess its requirements for Products and that it has received the information needed to order Products in full knowledge of the facts. Subsequently, it is the responsibility of the Customer to ensure that the characteristics of the ordered Products correspond both to the performance and implementation for the use for which they are intended.
All orders are irreversible once acknowledged by ZPCE and no cancellations or modifications can be made after reception of the order acknowledgement issued by ZPCE. Subsequently, any cancellation or modification of the order by the Customer incurs its liability and obliges it to compensate ZPCE for its disbursements and lost profit on the Products manufactured or being manufactured.
Orders may be placed by the Customer with ZPCE in a number of ways:
By mail, e-mail or fax sent to ZPCE;
For pre-season orders:
- By direct ordering on a remote order system. An acknowledgement note is created and sent to the Customer by email;
- By mail, email or fax

4 - PRICES

The Products are invoiced at the price in force on the date on which ZPCE issues the order confirmation. Prices are in Euros and do not include VAT.
France Shipping costs will be invoiced in accordance with the scale in force on the date on which ZPCE issues the order confirmation.
Export
All issues regarding shipping costs, insurance, customs duties and the transfer of risk, shall be regulated by the Incoterm (CCI version 2010) applicable to the sale agreed between the Customer and ZPCE.
The sending of prices does not constitute a firm offer on the part of ZPCE. ZPCE reserves the right to change its prices at any time, in particular in the event of a variation of over 10% in the cost of raw materials entering into the calculation of the cost price of a product, employee costs, transport costs or taxes generated.
In addition to this price, in France there is a "visible contribution" to the eco-contribution set by the current official scale of tariffs (see article 16).

5 - DELIVERY TERMS AND SCHEDULE

If the delivery is DAP (Incoterm CCI version 2010 formerly DDU), ZPCE shall manage and organise transport. The delivery deadline shall be understood to refer to reception of the Products at the Customer's premises and the Customer shall be responsible for the compliance and integral nature of the delivered Products.
ZPCE and the Customer may, however, decide that the Products shall be delivered under the regime of another Incoterm (CCI version 2010). In this case, the Incoterm shall set out the method and cost of transport, payment of customs duties and the time of transfer of risk for the Products.
If the chosen Incoterm implies that ZPCE is responsible and bears the risk of the Products, ZPCE shall freely organise carriage of the Products.
ZPCE shall not be liable in the case of partial or total failings, whether temporary or final, in the performance of an order when the causes are independent of its will and due to the seasonal nature of the Products, in particular the inability to operate the company in normal conditions, the lack of materials required for manufacture and the impossibility to make or receive deliveries. This may not give rise to cancellation or refusal of orders in progress, or reconsideration of the price, or withholdings, compensation or penalties of any kind.
ZPCE may make full or partial deliveries. In the event of a partial delivery, each delivery shall be considered a full sale for which payment is due.
Delivery schedules:
Failure to comply with the delivery schedule may not in any event give rise to cancellation of the order.
In the event of an unusually high number of Products ordered by the Customer, namely more than 15% of the number of Products ordered during the same month of the previous year, ZPCE reserves the right to modify the delivery schedule and shall notify the Customer of this change. In addition, any delay in delivery due to an unusually high order may not incur the liability of ZPCE. In this context, the Customer may not demand any late delivery penalties.

6 - TRANSFER OF RISK

Transfer of risk will take place according to the Incoterm (CCI version 2010) chosen by the Customer and ZPCE.
Therefore, from the time at which the risk is transferred to the Customer, according to the chosen Incoterm, the Customer shall bear the cost of any damage that the products may suffer or cause, for whatever reason, even in cases of force majeure, unforeseeable occurrences or due to acts by third parties.
Consequently the liability of ZPCE may not be invoked beyond the time at which the risk is transferred to the Customer, as defined in the chosen Incoterm (CCI version 2010).
The Customer must therefore take out an insurance policy covering the risks borne by the Products from the time of the transfer of risk and notify ZPCE as soon as possible of any event that may affect the insurance policy.

7 - COMPLIANCE – ACCEPTANCE

The condition, compliance, absence of visible defects and the number of Products must be verified by the Customer during the passing of risk at the time when the chosen Incoterm (CCI version 2010) defines the transfer of risk to the Customer. The costs and risks involved in verifying the Products are the responsibility of the Customer.
Any claim, reservation or dispute regarding any missing and/or damaged items and/or defects and/or anomalies must be recorded on the documents supplied during the transfer of risk (for example, on the delivery note or the haulage document in the presence of the driver) and notified by registered mail with acknowledgement of receipt to both the haulage company and ZPCE within 3 (three) working days of the delivery of the Products.
The Customer must prove the existence of any missing or damaged items, defects or anomalies concerning the Products. ZPCE reserves the right to make any on-site verifications either directly or via a representative or subcontractor. Any wording such as «subject to verification» or «pallets or boxes intact, but Products damaged» shall not be taken into account.
The liability of ZPCE, within the framework of the aforementioned reservations, is strictly limited to reimbursement of the disputed Products, their invoiced price or their exchange and excludes any further compensation. In the absence of any reservation or claim formulated by the Customer in accordance with the stipulations of this article, the Products sent during the transfer of risk shall be deemed compliant.

8 – GUARANTEES

Terms and Conditions

Unless otherwise stipulated, contractually guarantees the correct operation of new ZPCE Products. ZPCE guarantees that its Products comply with their technical specifications and are free from any material or manufacturing defects and that they correspond to technical

developments and best industry practice in force at the time they are marketed. Any changes made to the Products by the Customer at a later date (improvements or changes that are part of the technological progress of the Product) cannot be a cause for invoking the guarantee.

This warranty is limited, at ZPCE discretion, to either the repair of the Product, its replacement with a new or reconditioned Product or a refund of any Products acknowledged as defective by ZPCE. The shipping costs of the repaired or replaced product delivered to the ZPCE Customer shall be assumed by ZPCE, with the exception of labour, travel and/or accommodation expenses incurred by ZPCE for repairs performed outside of mainland France. These warranty conditions formally exclude any additional compensation. All Product returns must be pre-authorised and approved by ZPCE. Any automatic returns initiated by the Customer shall be refused by ZPCE. In particular, the spare parts warranty shall only apply after analysis and inspection of the returned parts by ZPCE, which will then make a decision to replace said parts. The seller's legal warranty shall continue to apply.
Moreover, in order to benefit from the warranty on any Product, the Customer and end user agree to comply with the following water balance parameters of the pool:

- pH: 6.8 < pH < 7.6; free chlorine (*): < 3.0 mg/L
- total chlorine (*): < 4.0 mg/L;
- total bromine (*): < 5.0 mg/L; stabilising agent (**): < 75 mg/L;
- total dissolved metals (iron, manganese, copper, zinc, etc.): < 0.1 mg/L.

(*): Pool cleaners must be removed from the pool before using a shock treatment.
(**): < 30 mg/L if Redox or ACL regulators are used.
Note: Use of well water or rain water is prohibited.
Heat pumps and dehumidifiers: warranty shall only apply to these Products if installed by a professional pool installer.
Moreover, in order to benefit from any Product's warranty, the Customer must comply with the installation and maintenance instructions.

General restrictions
This warranty shall not apply to apparent defects, i.e. visible defects that the ZPCE Customer or end user failed to report upon accepting delivery of the Products.
This warranty does not cover any defects or deterioration caused by the Product's unsuitability for the end user's needs, by normal wear, negligence, incorrect installation or by any use that does not comply with the recommendations stipulated in the user manual or in the studies and instructions issued by ZPCE, by maintenance operations non-compliant with the user manual provided at the time of sale and/or by a handling accident or incorrect storage.
Any modifications made to the Products by the Customer, end user or any third party will automatically void the warranty in full. The same shall apply in the event that original parts have been replaced by spare parts not sold by ZPCE.
The Customer is also responsible for ensuring the compatibility of Products with any other pool equipment with which it may be installed, by checking with the different manufacturers concerned, and for ensuring that all installation and operating instructions are complied with to guarantee the normal operation of the whole system.
This warranty shall be cancelled in the event that the Product(s) is(are) transferred to a third party.
This warranty shall only apply if the Product is equipped with its original serial number and identification label.
For Product returns to ZPCE workshops, the return shipping costs shall be assumed by the end user.
Immobilisation and deprivation of use of a Product due to repair shall not give rise to compensation.
Term
The effective warranty start date is the date mentioned on the sales invoice for the new Product, issued by the Customer to the end user. This date shall not be prior to the Product's issue date to the end user.
The length of guarantee for all Products (except the product categories specified below) is 2 years as from the date of the sales invoice for the new Product issued by the Customer of ZPCE to the end user, with this date not being earlier than the date on which the Product is delivered to the end user.

This document is required as proof of purchase in order for the warranty to be effective. Failing this, the Customer shall bear the full cost of all prejudicial consequences to ZPCE or of any claims made by the end user under the contractual warranty subsequent to its expiry date.
Any period of over 7 days during which the Product is out of use shall be added to the period of the guarantee remaining on the date on which an intervention is requested or, if later, the date on which the Product is made available for repair.

Heating and dehumidification systems
Unless otherwise stipulated, ZPCE contractually guarantees the correct operation of these Products installed and commissioned by a professional pool installer for a period of 2 years from the date of the sales invoice of the new Product, issued by the Customer to the end user, which shall not be prior to the Product issue date.
The end user is reminded of their responsibility to provide regular Product maintenance by an approved expert as stipulated in the Product's user manual. ZPCE shall only cover Product material and manufacturing defects acknowledged by ZPCE after inspection by ZPCE's technical services.
In any event, this warranty shall not apply to malfunctions and/or degradation connected to a factor outside of ZPCE control (incorrect power supply, by-pass configuration, incorrect air distribution, improper building insulation, thermal bridges, improper overwintering, etc.).
The condenser of heat pump Products benefits from 5-year warranty against corrosion.
For dehumidifier Products: any operating anomalies must be reported to ZPCE as soon as the problem is observed.

Heat pumps of ranges Z200, Z300, ZS500 and PM30
The guarantee is for a period of 3 years from the date of the sales invoice of the new Product, issued by the Customer to the end user, which shall not be prior to the Product issue date.

Provisions specific to Products in the Salt Chlorinator and Regulation Range
The guarantee applies without conditions to the Hydroxinator ranges of products and salt water chlorinators.
TRi, TRi Expert and Hydroxinator Products benefit from a 3-year warranty period.
MagnaPool™ consumables such as minerals are not covered by this warranty with the exception of manufacturing defects detected during commissioning.

Nature² Range
Nature² Fusion Products are guaranteed for a period of 3 years from the date appearing on the sales invoice of the new Product, issued by the Customer to the end user, which shall not be prior to the Product issue date.
Nature² consumables such as cartridges are not covered by this warranty with the exception of manufacturing defects detected during commissioning.

Electric Robot Cleaner Range
This warranty does not cover the following:
- Normal wear of parts such as tyres, tracks, brushes, belts, gears or filters,
- Electrical damage caused by lightning or incorrect electrical connection,
- Breakages resulting from impacts, improper use or incorrect maintenance (including robots, accessories and cabling).

Vortex Pro robots and JD Clean 4X4
The guarantee is for 3 years as from the date specified on the sales invoice for the new Product issued by the Customer of ZPCE to the end user which shall not pre-date the date of delivery.

Automation systems
This warranty shall not apply to malfunctions and/or degradation connected to a factor outside of ZPCE control (incorrect power supply, incorrect connections, low quality WiFi and/or internet network, unsuitable internet box or modem, etc.).

Filtration equipment
The warranty period for the Boreal and FloPro ranges is 3 years from the date appearing on the sales invoice of the ZPCE new Product, issued by the Customer to the End User, which shall not be prior to the delivery date.
Filtration consumables such as Crystal Clear glass filter media are not covered by this warranty with the exception of manufacturing defects detected during commissioning.

9 - PRODUCT RETURNS

Principles
- Without the prior agreement of ZPCE, the Customer may not:
- Refuse any Products already dispatched;
- Refuse and/or return any delivered Products;
- Refuse to pay for the Products.

In the event of return/refusal of the Products and non-compliance with the aforementioned principles, a fee for inspection/repackaging (variable according to the condition of the goods) and shipping costs shall be invoiced to the Customer.
Procedure
- ZPCE accepts or does not accept return of the Products (except spare parts). In the case of a mistaken order, if ZPCE accepts the return, a return acceptance form shall be sent to the Customer specifying the costs of restocking the goods (based on Products in perfect condition and depending on the actual condition when received at ZPCE premises). The customer then affixes the form to the Products. Failure to do this will result in the Products not being taken back by ZPCE.
- The Customer must return the Products at its own expense in perfect condition, without having modified them;
- ZPCE then inspects the number and condition of the Products;
- ZPCE accepts or does not accept to take back the Products in full or in part;
- ZPCE exchanges the Products or issues a full or partial credit note.

10 - PAYMENT – TERMS

In France

Invoices are payable to the address of the ZPCE invoicing center specified by ZPCE, by cheque, bank transfer or bill of exchange. The payment schedule is the suppletory legal period of thirty (30) days, in accordance with LME law.

However, the first order placed by the Customer is payable upfront on the day of placing the order, by cheque, bank transfer or bill of exchange. ZPCE reserves the right to modify customary practice with a Customer at any time, and to require full payment of any order prior to delivery and without discount, in the event of disclosure of a risk likely to affect the creditworthiness of the Customer.

A 30% deposit shall be required for the order for any customised Products or Products requiring special manufacture. ZPCE does not offer any discount for early payment. Any discount applied by the Customer shall automatically lead to the temporary or permanent suspension of its account.

International sales

Payment shall be made immediately on delivery without discount by Swift transfer or, at the convenience of ZPCE by an irrevocable bill of exchange confirmed by a first-tier bank to the benefit of ZPCE in compliance with the Uniform Customs and Practice for Documentary Credits published by the International Chamber of Commerce and acknowledged at the time of signing the sales contract. The credit shall then be paid at sight and no discount shall be offered for early payment. The documents required for payment of this credit shall be those stipulated by the Incoterm (CCI version 2010) specified in article 5.

In all events, payment shall be deemed to have been made when the funds appear on the ZPCE bank account. Invoices issued by ZPCE are always payable in Euros to the head office of ZPCE. Any compensation resulting from alleged or acknowledged Customer debts is excluded. ZPCE does not offer any discount for early payment. Any abusive discount applied by the Customer shall automatically lead to the temporary or permanent suspension of its account.

11 - LATE PAYMENT OR FAILURE TO PAY

Any delay in partial or total payment of an invoice will entitle ZPCE to demand a late payment penalty in an amount equivalent to three times the French legal interest rate, as well as a fixed compensation payment of €40 for recovery costs, notwithstanding the option available to ZPCE to demand additional compensation, on the basis of substantiating documents, if recovery costs are more than €40. Failure to pay a single payment when due will result in all current outstanding amounts becoming due. ZPCE reserves the right to demand immediate payment of all amounts remaining due and reserves the right to suspend any delivery until all outstanding invoices are fully settled or to cancel current orders, without prejudice to any further legal action.

The deduction of discounts and/or payment of refunds are subject to full payment of sums payable to ZPCE by the Customer. Such discounts and/or refunds will not be applied if the payment conditions are not met or if sums remain unpaid for any reason whatsoever.

Unless otherwise agreed, amounts payable by the Customer in respect to Products purchased may not be offset against sums due for payment thereto by ZPCE. Any deduction made by the Customer from the total of an invoice, for which ZPCE has not given its consent, will constitute a payment incident justifying suspension of deliveries.

In any event, the Customer undertakes, pursuant to Article L. 442-1 of the French Commercial Code, not to automatically deduct, from any invoice issued by ZPCE, penalties or discounts relating to failure to meet a delivery date or non-compliance of Products, when the debt is not certain, liquid or payable, where ZPCE has not been able to confirm the existence of the claimed grievance.

12 - LIABILITY

Notwithstanding the provisions of articles 6 (Transfer of risks), 8 (Guarantees) and 14 (force majeure), ZPCE may not in any way be held liable for any losses, financial damage, damage to business, Customer losses or losses of orders subsequent or not to the acquisition, use or resale of the Products by the Customer.

The liability of ZPCE may only be invoked on the basis of information and requirements sent in writing by the Customer, which shall be solely responsible for the accuracy and precision of the information provided.

ZCPE must be notified of a claim made against it by the Customer regarding the performance of sales during a given calendar year, whatever the cause or nature of the claim, by means of a registered mail with a return receipt, no later than twelve (12) months following the said year. Once this time period has expired and notwithstanding the provisions of article L 110-4 of the French Code of Commerce, no claim for the previous calendar year may be enforced by the Customer against ZPCE, which the customer acknowledges and expressly accepts.

In the event of a claim recognised as justified by ZPCE, its liability shall be limited to the replacement, repair, exchange for a new or reconditioned product or reimbursement of the Products, without any claim for compensation and/or penalties being admitted for any reason.

13 - RETENTION OF TITLE

ZPCE shall retain title of the delivered Products until they have been completely paid for by Customer.

In this respect, payment is deemed to be the actual payment into the ZPCE bank account of monies for the Products, related sales costs and any interest.

The provision of a bill of exchange or other documents creating an obligation to pay does not constitute payment in the sense of this clause.

Throughout the retention of title period, when the risks have been passed on to the Customer under the terms of article 6 above, the Customer, as the depositary of the Products, must insure the Products against all risks of damage or liability and, in particular, take out a liability insurance policy to cover the Products on behalf of ZPCE at its own cost.

The Customer must allow all delivered and unpaid Products to be reclaimed any time. It is expressly agreed that Products in stock at the Customer's premises are deemed to correspond to unpaid invoices.

Any Customer authorised to re-sell the delivered Products in the normal course of its business must immediately notify ZPCE of any seizure of the Products delivered under retention of title for the benefit of a third party. In addition, the Customer is prohibited from pledging title of the Products or providing it as collateral. In the event of re-sale, the Customer undertakes to assign the debts from its sub-purchasers to ZPCE up to the amount due.

In the event of non-payment of some or all of the instalments agreed for the price and fifteen (15) days after formal notification by registered mail remains unheeded, in whole or in part, ZPCE reserves the right to continue performance of the sale or reclaim the Products. In the latter case, the Products must be made immediately available to ZPCE, unless ZPCE requires the Products to be returned at the risk and expense of the Customer. This reclamation may be made by any means, including by registered mail, fax, summons by a bailiff or joint inventory, at the cost and risk of the Customer. Return of the Products does not imply resolution of the sales contract. Any amounts already paid by the Customer (in particular deposits) shall be retained as initial compensation, and subject to any other further compensation.

In the event of the Products being converted or integrated into a structure, the transfer of title of ZPCE goods shall be transferred to the goods resulting from the conversion or to all or part of the cost of the converted goods.

The aforementioned provisions do not affect transfer to the Customer of the risks of loss and deterioration of the sold Products.

14 - FORCE MAJEURE

ZPCE shall be released from its obligations, in particular as regards deliveries, on account of any event independent of its will that may prevent or delay delivery of the Products, assimilated contractually to force majeure. This shall in particular apply in the case of events occurring at ZPCE, such as lockouts, strikes, epidemics, embargoes, accidents, interruption or delay in transport, the impossibility of receiving deliveries from its suppliers, defects in raw materials, a notable change in the political situation in the country of the Customer or in France or any other event independent of the will of ZPCE leading to total or partial work stoppage at ZPCE.

15 - INTELLECTUAL AND INDUSTRIAL PROPERTY

A Customer may only mention or use trademarks, logos, documents or any other intellectual property right belonging to or used by ZPCE after obtaining explicit prior written consent from ZPCE, and only to promote resale of Products under its normal business conditions.

Any use by the Customer of a trademark, logo or other distinctive signs will be subject to its full and sole responsibility, in accordance with the graphic layout style and legal information regarding the Products, particularly in the event that they are displayed on an internet site as well as on any printed medium.

Any document of any kind whatsoever, provided or sent to the Customer, remains the exclusive property of ZPCE and, unless explicitly agreed in advance, may not be communicated to third parties, for any reason whatsoever.

16 – FRANCE ONLY / ECO CONTRIBUTION or WEEE

(Waste Electrical and Electronic Equipment directive)

In compliance with directive 2002/96/EC dated 27 January 2003 relating to waste electrical and electronic equipment, a contribution must be applied to every new item of household electrical and electronic equipment sold. This visible contribution is not a tax; VAT is therefore applied to the value of this contribution. The scale for this contribution is set by legislation; ZPCE applies the current official scale and will make updates during the year, in accordance with the law.

17 - SPECIFIC PROVISIONS FOR CHEMICAL PRODUCTS SOLD BY ZPCE

Product Information

Chemical products offered for sale by ZPCE (hereinafter «the Chemical Products») are delivered with their safety data and composition sheets, as drafted by the supplier of ZPCE. ZPCE also provides information regarding the technical nature and composition of the Chemical Products, as drafted by the supplier, on its website in the Customer's personal area, together with information regarding the storage and layout of the Products, which is added for information purposes only.

Any order of a quantity that does not conform to the rules governing packing or pallet size cannot be accepted by ZPCE.

Free shipping – mainland France

The Customer shall be exempt from shipping costs for all deliveries of Chemical Products

over €1,000, excluding tax. For all deliveries of Chemical Products under €1,000, excluding tax, a fixed fee of €190 shall be invoiced to the Customer for shipping costs.

Transport - Storage

As Chemical Products are subject to regulations regarding the storage and transport of dangerous goods, the storage and transport of the said goods are arranged by a supplier of ZPCE familiar with these regulations, rather than by ZPCE itself.

The risks related to Chemical Products are transferred as from the time at which the Products are made available or handed over to the first transporter in the warehouses of the supplier of ZPCE. Subsequently, the Chemical Products travel at the risk of the Customer, whose responsibility it is, in the event of damage, loss or missing items, to make any reservations and exercise any redress against the transporters responsible.

Product Dispatch

Chemical Products travel at the risk of the Client, whatever the method of transport, and whether shipping has been prepaid or not. In the event of damage, the Customer must make all the necessary reservations, specifying the nature and extent of the damage observed, on the documents on which it is invited to grant discharge, and confirm its reservations in a registered letter sent to the haulage company within the number of days specified in article L 133-3 of the French Code of Commerce. No claim shall be considered once 48 hours have elapsed since delivery.

Guarantee

The Customer benefits from the guarantee of the ZPCE supplier of Chemical Products.

ZPCE declines any other express or implicit guarantee regarding the Chemical Products, including but not limited to visible defects, marketability, suitability for a specific use or the results achieved by using the Chemical Products.

Also excluded are defects or deterioration caused by the unsuitability of the Chemical Products for the requirements of the Customer and end-user, normal wear and tear, negligence, inappropriate installation or use that does not comply with recommendations, insufficient maintenance and/or handling accidents or by inappropriate storage.

The Customer shall bear all risks of whatever nature regarding use of the Products purchased from ZPCE, whether alone or combined with other products or articles or in any other processes.

18 - CONFIDENTIALITY AND PERSONAL DATA PROTECTION

The Customer undertakes to strictly safeguard and keep the Confidential Information supplied by ZPCE or its representatives, and not to disclose or supply it, in full or in part, to a third party, without the prior express written consent of ZPCE which shall be requested in writing, stating the purpose of the disclosure.

We hereby inform you that your personal data shall be processed by Zodiac Pool Care Europe

Your data shall be processed for the purpose of handling the purchase of the Products.

The legal basis for processing your data is the execution of the obligations issued under this GTS.

Your data shall not be assigned, sold, leased or in any other way whatsoever made available to third parties, except in the event of ZPCE's service providers, that render certain services to ZPCE, but under no circumstances shall they process them for their own purposes. Some of these service providers may be based outside of the European Union, as stated below.

ZPCE, as a company with international outreach, has international service providers that may render their services from outside the EU, as a result of which it is possible that your data may be transferred outside of the European Union or the European Economic Area.

In any event, Fluidra shall ensure that such data processing is protected by the appropriate safeguards, which may include:

- Standard clauses approved by the EU. These are contractual clauses approved by the European supervisory authority that provide sufficient safeguards to ensure that data processing complies with the requirements established by the European Data Protection Regulation.

- Third-party certification. Privacy Shield, for example, is a framework agreement between the EU and the United States that establishes the standards for processing data in compliance with the European Data Protection Regulation.

All data that you provide to ZPCE shall be processed for the time required to deal with the purchase made.

Once the term stated in this section has come to an end, ZPCE shall keep your personal data on record duly masked for statistical purposes or market surveys, provided this is possible, or duly locked in order to comply with any legal obligations to which the company is subject.

You may at any time withdraw your consent to your data being processed for any of the above purposes.

You make likewise exercise your rights of data access, rectification, erasure, objection, restriction and portability by writing to FLUIDRA, SA, Avda. Francesc Macià, 60, planta 20, 08280, Sabadell, with the subject line "Datos Personales Condiciones Generales de Venta" or an email to dataprivacy@fluidra.com.

Should you have any inquiries about how we process your personal data, or any other questions related to this matter, you may contact our Data Protection Officer at Avda. Francesc Macià pl. 20, 08208 Sabadell (Barcelona), with the subject line or addressed for the attention of "Delegado de Protección de Datos", or by writing an email to dataprivacy@fluidra.com.

Furthermore, you may lodge a complaint with the Spanish Data Protection Agency should you consider that ZPCE have processed your data in breach of this Privacy Policy or any other regulation in force related to this matter.

19 - MISCELLANEOUS

All documents of any kind, provided for or sent to the Customer, remain the exclusive property of ZPCE and, except with express prior agreement, and may not be communicated to third parties for any reason whatsoever.

The fact that ZPCE does not invoke any one of the provisions of the GTS at any given time may not be interpreted as ZPCE waving the right to invoke this condition at a later date.

20 - APPLICABLE LAW - JURISDICTION

Jurisdiction

It is expressly agreed that exclusive competence for any disputes that may arise between the parties during their business relationship shall be attributed to the courts of the head office of ZPCE, whatever the place of delivery, accepted method of payment, and even in the event of third party appeals or multiple respondents.

Applicable law

Relations with the Customer are governed by French law. If these General Terms of Sale have been translated into a foreign language, only the text drafted in French shall be valid.